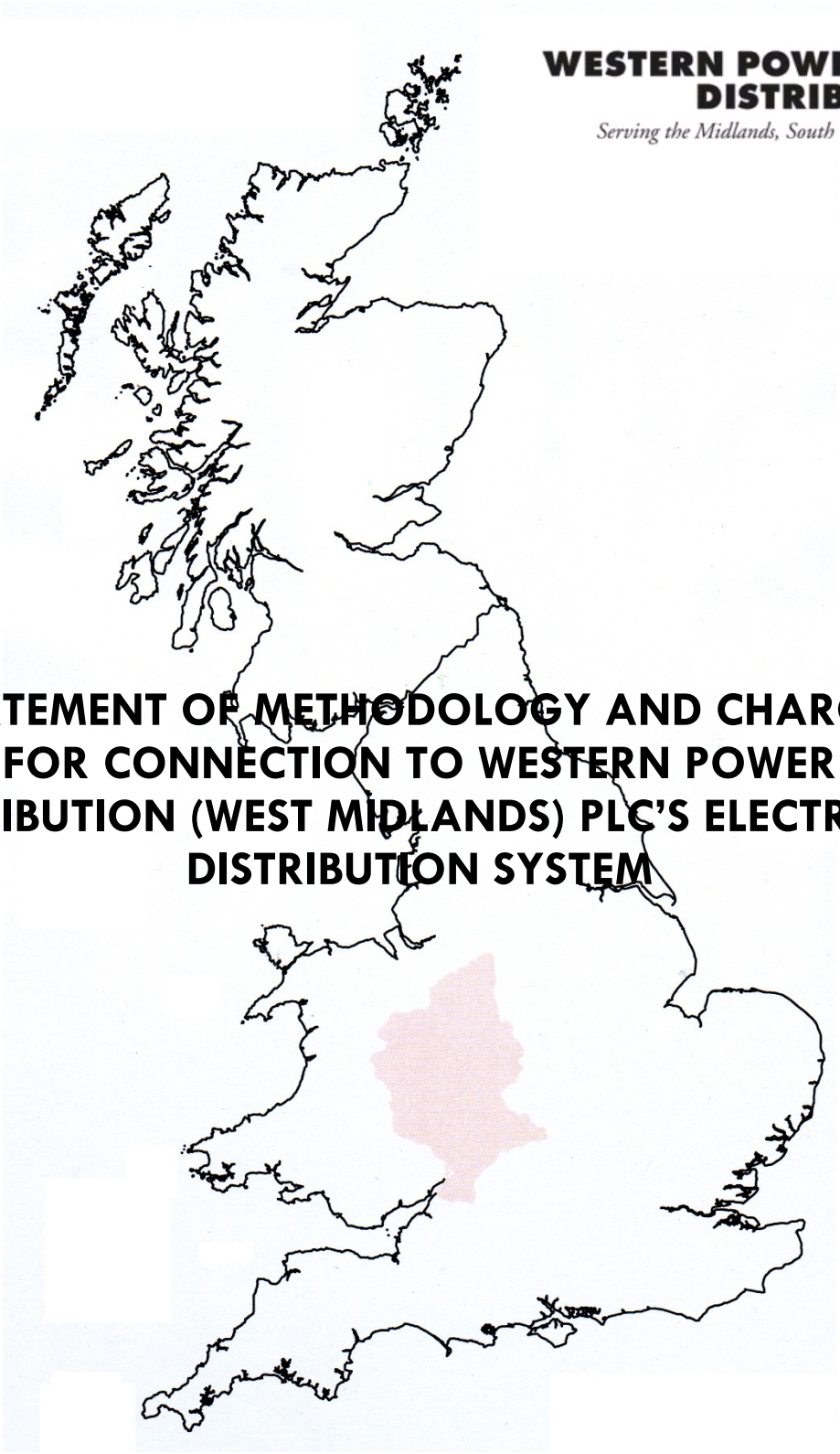

# STATEMENT OF METHODOLOGY AND CHARGES FOR CONNECTION TO WESTERN POWER DISTRIBUTION (WEST MIDLANDS) PLC'S ELECTRICITY DISTRIBUTION SYSTEM

## APRIL 2022

Western Power Distribution (West Midlands) plc
Registered Office:
Avonbank
Feeder Road
Bristol
BS2 0TB
Registered in England and Wales No. 3600574

# Contents

**Important Note** ..... **4**
**Section 1 – General Information** ..... **5**
Competition in Connections ..... 6
Contractual Framework ..... 6
Structure of this document and Further Information ..... 8
Disputes ..... 8
**Section 2 – Applying for a connection where we undertake all of the relevant work** ..... **10**
Persons entitled to apply for a connection ..... 10
Procedure for getting a connection ..... 10
Information Required ..... 10
Budget Estimates ..... 11
Feasibility Studies ..... 11
Connection Offers - How is your formal application handled? ..... 12
Cost Breakdown ..... 13
Interactive Connection Applications ..... 13
Transitional arrangements ..... 15
Small Scale Embedded Generation ..... 15
Embedded Networks ..... 16
**Section 3 – Applying for a connection where an ICP undertakes the Contestable Work** ..... **17**
Introduction ..... 17
Procedure for getting a connection ..... 17
Information Required ..... 18
Budget Estimates ..... 19
Feasibility Studies ..... 19
POC Offers - How is your formal application handled? ..... 19
Cost Breakdown ..... 21
Interactive Connection Applications ..... 21
Transitional arrangements ..... 21
**Section 4 – Information specific to us** ..... **22**
Introduction ..... 22
Connection Offer and POC Offer Validity Periods ..... 22
Increase or decrease in Required Capacity ..... 22
Temporary De-energisation ..... 22
Capacity of Domestic Connections ..... 23
Large Low Voltage Connections ..... 23
Helpful Advice for Reducing Your Connection Charge ..... 23
Calculation of Assessment and Design charges ..... 24
**Section 5 – Common Connection Charging Methodology** ..... **26**
Minimum Scheme ..... 26
Cost Allocation ..... 27
Costs to be paid in full by you ..... 27
Costs to be apportioned between you and us ..... 28
Recovery of costs for previous works ..... 31
Costs to be paid in full by us ..... 31

Additional Cost Allocation for Flexible Connections ..... 32
Recovered Equipment and Deferment of Asset Replacement ..... 33
Rebates ..... 33
Speculative Developments ..... 34
Connection Alterations ..... 34
National Grid Electricity Transmission (NGET) Charges ..... 34
Land Rights ..... 35
Unmetered Supplies ..... 35
Capacity Ramping for LDNOs ..... 35
Disconnection and De-Energisation ..... 36
Adoption Payments ..... 36
Competition in Connection ..... 36
Worked Examples Illustrating the Application of the Connection Charging Methodology ..... 37
**Section 6 – Our Specific Connection Charging Methodology ..... 85**
Introduction ..... 85
Payment Terms ..... 85
Operations, Repairs and Maintenance ..... 85
Competition in Connections ..... 85
Non-Contestable Work ..... 85
Factors influencing Competition in Connection (CIC) Charges ..... 86
Contestable Work ..... 86
Contestable Reinforcement and Diversionary Work ..... 88
Table of Contestable/Non-Contestable Work ..... 88
Inspection and Monitoring Regime ..... 90
Connection Offer and POC Offer Terms and Conditions ..... 93
Land Rights ..... 93
Operation & Maintenance Percentage ..... 93
Margin included in Connection Offers ..... 93
**Section 7 – Connection Charging Statement ..... 95**
Introduction ..... 95
Quotation Accuracy Scheme ..... 96
A Budget Estimates ..... 98
B Feasibility Studies ..... 100
C Assessment and Design for all relevant work ..... 102
D CIC Assessment and Design of the Non-Contestable Work ..... 105
E CIC Design Approval of the Contestable Work ..... 108
F Construction ..... 110
G CIC Final Works and Phased Energisation ..... 126
H CIC Inspection and Monitoring of the Contestable Works ..... 127
I Land Rights ..... 128
J Other ..... 129
**Section 8 – Glossary of Terms ..... 130**

# Important Note

This document consists of a Connection Charging Methodology that has been approved by the Gas and Electricity Markets Authority ('the Authority') and a Connection Charging Statement, the form of which has been approved by the Authority. This document also provides other information to explain the options available for obtaining a connection and the processes that need to be followed.

The Connection Charging Statement provides the basis of charges for the provision of a connection whilst the Connection Charging Methodology describes the methodology under which Customers will be charged for a connection to Western Power Distribution (West Midlands). We are a Licensed Distribution Network Operator (LDNO).

This document has been prepared by us in accordance with the requirements of our Licence issued under the Electricity Act 1989 (as amended)('the Act').

A fee of £15 plus VAT will be payable at our discretion for each hard copy of this document which is provided in accordance with a request. An electronic copy of this document is available free of charge from our website at:

http://www.westernpower.co.uk

Click on "Use of System Charges" within our home page

# Section 1 – General Information

1.1 We are Western Power Distribution (West Midlands) plc an LDNO serving customers in the west part of the West Midlands Conurbation, the majority of the counties of Gloucestershire, Worcestershire, Herefordshire and Shropshire, the west part of Staffordshire including the Stoke conurbation and small parts of Oxfordshire (Banbury), Warwickshire (Stratford) and Cheshire (Congleton). Some of the LDNOs have Distribution Service Areas which are shown on the map below.

1.2 Whilst some LDNOs do not have a Distribution Services Area, they may also be able to provide connections to customers within Great Britain.

1.3 The provision of a connection to our Distribution System may be undertaken by ourselves, our agents or associated companies. Alternatively, certain activities may be undertaken by an Independent Connections Provider (ICP).

1.4 This document describes the Connection Charging Methodology under which Customers will be charged for connection and provides details of illustrative costs; it also describes how you can obtain a new or altered connection to our Distribution System.

1.5 We will review this document in accordance with our Licence obligations at least once a year to ensure that the information continues to be accurate in all respects. Costs shown in the Connection Charging Statement are current at the time of publication and are subject to change without notice except as otherwise provided.

1.6 Certain words in this document are capitalised, e.g. Distribution System. These words have a specific meaning which is set out in the Glossary of Terms. The words "you", "your" and "yourself" refer to the Customer, the person requesting a connection, his company or agent and "we", "us", "our" and "ourselves" refer to Western Power Distribution (West Midlands) plc or our agents.

## Competition in Connections

1.7 Competition in Connections (CIC) is the term attributed to the opening up of the market for the design, procurement and installation of new assets necessary to accommodate a new or modified electricity connection. You have the option to have some of the connections work, referred to as Contestable Work, carried out by an ICP who must be accredited with Lloyds Register unless otherwise agreed with us.

1.8 Section 6 of this document contains details of the elements of work which are Contestable and Non-Contestable, and the arrangements which apply if you choose to appoint an ICP to carry out Contestable Work.

1.9 The Non-Contestable Work can only be carried out by us or our appointed agents.

1.10 If you wish to appoint an ICP to carry out Contestable Work you may do so, and if you want us to adopt the Contestable Work after completion we will require you and/or your ICP to enter into an Adoption Agreement.

1.11 Further information outlining the process and options available is given in Section 3 of this document.

## Contractual Framework

1.12 Depending on the size and type of the connection and whether you wish ourselves, or an ICP, to undertake any Contestable Work you will need to enter into a set of contractual arrangements. Unless you are an LDNO, you will also need to appoint a Supplier who must also be a party to various industry agreements and codes. These are outlined below:-

**Offer to connect the Premises and to construct the connection (Connection Offer)**

1.13 The offer that we make to you to carry out the connection works (both Non-Contestable and Contestable Work) to our Distribution System which will, if accepted by you, create a legally binding contract between you and us. Its terms will depend, amongst other things, on the complexity and value of the work to be carried out.

**Offer to undertake Non-Contestable Work only (POC Offer)**

1.14 The offer that we make to you to carry out the Non-Contestable Work only to allow connection to our Distribution System which will, if accepted by you, create a legally binding contract between you and us. Its terms will depend, amongst other things, on the complexity and value of the work to be carried out.

**Adoption Agreement**

1.15 The Adoption Agreement is an agreement for us to adopt the Contestable Work, subject to the satisfaction of certain conditions. This agreement, amongst other things, addresses a number of fundamental principles:

- The transfer of title from the asset owner (normally the Customer or the ICP) to us;
- The quality and safety of the adopted asset;
- Any required sureties;
- The transfer of Land Rights;
- The procedure for us to Energise the assets installed by the ICP during the works;
- The payment of any residual Connection Charges or fees;
- Planning permissions and compliance with street works legislation; and
- Defect correction processes, where applicable.

The parties to the Adoption Agreement may vary depending on the circumstances and may be between:-

- us and you
- us and your appointed ICP
- us, you and your appointed ICP

**Connection Agreement**

1.16 The owner/ occupier of the Premises to which the connection is to be provided will be required to enter into a Connection Agreement with us. The Connection Agreement will set out the terms upon which they will be, and remain, connected to our Distribution System. The Connection Agreement will normally be provided on our behalf by the owner/occupier's chosen Supplier for the Premises as part of their application for a supply of electricity.

1.17 However, in some cases for larger connections, or where non-standard conditions exist, we will provide a site-specific Connection Agreement, which replaces any Connection Agreement put in place via the Supplier, as part of the connection process. This particular Connection Agreement will only take effect upon completion of the connection and will set out, in more detail, our rights and obligations to one another. Additionally, it may contain the technical detail of the installation being connected to the Distribution System and will require the owner/occupier of the Premises to comply with the provisions of the Distribution Code.

1.18 The Distribution Code covers, amongst other matters, all material technical aspects relating to:

- connection to, and the operation and use of a LDNO's Distribution System; and
- the operation of electrical lines and electrical plant or apparatus connected to an LDNO's Distribution System.

A copy of the Distribution Code can be downloaded from the Distribution Code website at www.dcode.org.uk.

**Appointment of a Supplier**

1.19 It is your responsibility to make arrangements with a Supplier of your choice. You, or your Supplier, must also arrange for the installation of metering equipment appropriate to the connection that is being provided for you. The metering must be installed before a supply of electricity can be provided. In order to obtain a supply of electricity, you will need a Supply Number (also known as a Meter Point Administration Number or 'MPAN') for each connection. We will issue the MPAN shortly before installing the connection, but only upon receipt of the full postal address of the Premises.

**Please note that we are unable to give advice on a choice of Supplier.**

The link below will take you to the Ofgem website where you will find a list of Suppliers.

www.goenergyshopping.co.uk

1.20 Energisation will not take place unless the appropriate metering, where this is required, has been installed.

1.21 Your Supplier will be a party to a number of industry codes and agreements which, will allow it to use the GB Transmission System, our Distribution System and also allow it to purchase and trade energy on behalf of its customers.

## Structure of this document and Further Information

1.22 The document is divided into a number of Sections.

1.23 Section 2 outlines the high level process for applying for a connection where we undertake all the relevant works and provides the relevant contact details.

1.24 Section 3 outlines the high level process for applying for a connection where an ICP undertakes the Contestable Work and provides the relevant contact details.

1.25 Section 4 provides further information specific to us regarding obtaining a connection.

1.26 Section 5 details the Common Connection Charging Methodology which sets out how Connection Charges are to be calculated and includes examples of how the methodology would be applied in particular circumstances.

1.27 Section 6 details our Specific Connection Charging Methodology which includes additional aspects of our charging methodology that are not included in Section 5.

1.28 Section 7 contains the Connection Charging Statement which enables reasonable estimates of the charges liable for connection to be made.

1.29 Section 8 provides a glossary of terms used throughout the document.

1.30 For further information about this document (or if you need advice about getting a connection), please contact: -

For information about this document

Connections Strategy Engineer
Western Power Distribution
Pegasus Business Park
Herald Way
Castle Donington
Derbyshire
DE74 2TU

e-mail: info@westernpower.co.uk

## Disputes

1.31 If you are not satisfied with the terms we have offered, or with our handling of your application, please contact our local point of contact in the first instance to discuss your

concerns. If we cannot resolve your concerns satisfactorily you can escalate the matter using our disputes process. The disputes process is set out on our website:

http://www.westernpower.co.uk

Click on "Contact Us" within our home page and follow the link called "Complaints".

Alternatively you may telephone: 0800 0556833 or Email complaints@westernpower.co.uk

1.32 If you are still not satisfied with our actions and you have followed our complaints procedure, then domestic and small business customers have the right to contact the Energy Ombudsman. This is a free and independent dispute resolution service. They can be contacted at:

Energy Ombudsman
PO Box 966
Warrington
WA4 9DF
Phone: 0845 055 0760
Fax: 0845 055 0765
Email: enquiries@energy-ombudsman.org.uk
www.energy-ombudsman.org.uk

1.33 If the Energy Ombudsman is unable to deal with or resolve the dispute then either party may request a determination of the matter by the Gas and Electricity Markets Authority (the Authority), whose details are:

The Office of Gas and Electricity Markets (OFGEM)
9 Millbank
London
SW1P 3GE
Phone: 020 7901 7000
Fax: 020 7901 7066
www.ofgem.gov.uk

# Section 2 – Applying for a connection where we undertake all of the relevant work

This Section applies where you want us to undertake all the works necessary to provide your connection. Section 3 applies where you wish to appoint an ICP to undertake any Contestable Work. You may make a request under Section 2 and Section 3 at the same time.

## Persons entitled to apply for a connection

2.1 Any person may apply in their own right for a connection to our Distribution System.

2.2 Any person may appoint an agent to apply for a connection on their behalf but the agent may be required to provide written evidence of their appointment on application.

2.3 Persons entitled to seek connection to our Distribution System for the purpose of generating electricity or for supplying electricity are those who are authorised by licence or by exemption under the Act to generate or supply electricity.

## Procedure for getting a connection

2.4 A person seeking a new or modified connection should contact us as detailed below.

Records Team
Western Power Distribution
3rd Floor
Toll End Road
Tipton
DY4 0HH

Tel: 0845 0727270
e-mail: wpdnewsuppliesmids@westernpower.co.uk

2.5 We will offer terms for the making of a connection as soon as reasonably practicable, but in any event within three months once we have received your completed application. In addition to the terms for making the connection we will specify the proposed POC to our Distribution System, the location of the Entry/Exit Point on the Premises to be connected and details of the work to be carried out by us.

The link below will take you to our website where further information is available:

http://www.westernpower.co.uk

Click on "Connections" within our home page and follow the links.

## Information Required

2.6 When you make your application to us you should provide the information set out below. In some cases, it is possible that additional information will be required and we will notify you of this when we have assessed your requirements.

2.7 If you do not provide the information we need it will prevent us from dealing with your enquiry as quickly as we would like, so please provide the information indicated on our application form. The information we require will vary depending on the nature of your connection request. Typically we require the following details:

- Your name and correspondence address and other contact details.
- The Premises address.

- Whether you require a Budget Estimate or a formal Connection Offer. A formal Connection Offer is a contractual document and more appropriate once you are in a position to decide whether the project can proceed to the construction phase.
- A site location plan showing the site boundary.
- A site layout plan, drawn to a suitable scale, indicating where the connection(s) are required.
- The number of connections you require.
- The Required Capacity for each connection.
- Details of the heating to be installed.
- The date by which you require the connection to be made.
- Whether the connection is required for a fixed period or indefinitely.
- The type of connection required, e.g. demand, generator or for a licensed, embedded network. Further information on generation connections can be found in our Distributed Generation Connections Guide which can be accessed from our website.
- Any information you have in respect of equipment which may interfere with our Distribution System or the supply of electricity to others (e.g. apparatus which can cause voltage fluctuations, such as large motors associated with air conditioning systems, lifts, cranes, hoists and other similar plant; or apparatus which can produce harmonics, such as uninterruptible power supplies or electronic control systems).

An application form can be downloaded from our website;

http://www.westernpower.co.uk

Click on "Connections" within our home page and follow the links.

## Budget Estimates

2.8 If you make an enquiry of a provisional nature we can provide an indication of the charge for providing the connection in a Budget Estimate. We will not carry out any detailed design work and the assessment will be carried out as a desk top exercise. Any estimate that we provide at this stage will be the result of a preliminary assessment only and possibly without any site specific considerations being taken into account. You should note that the estimate that we provide at this stage may vary considerably from any further Budget Estimates or the price in any formal Connection Offer. A Budget Estimate is not a formal offer for connection and cannot be accepted by you. See Section 7, Part A for charges associated with the provision of Budget Estimates.

## Feasibility Studies

2.9 We may undertake at your request, generally for more complex connections, a Feasibility Study to consider a number of options for connection and provide estimated costs for each option as appropriate. Any cost estimated at this stage will be purely indicative and not binding. The price in any formal Connection Offer to you may differ from it. A Feasibility Study is not a formal offer for connection and cannot be accepted by you. See Section 7, Part B for charges associated with the provision of Feasibility Studies.

## Connection Offers - How is your formal application handled?

2.10 You do not need to have requested a Budget Estimate or Feasibility Study before you request a formal Connection Offer. When you request a connection to our Distribution System, your request is dealt with in five key stages.

**Stage 1 – Your application**

2.11 We will only be able to progress your application once you have provided us with the information we require (see 2.7). We will notify you if we require any additional information in order to process your application. Where applicable, we will also notify you in writing that you will be required to pay Connection Offer Expenses (see also paragraphs 4.11-4.13), as set out in Section 7, whether or not you accept your Connection Offer. If you inform us within 10 working days that you do not wish to proceed, we will not charge you. If you inform us after the 10 days, we may charge you according to how much time we have spent assessing the application.

**Stage 2 – Our design**

2.12 When we design the connection for you it takes into account the location of the Premises for which the connection is required, its proximity to the existing Distribution System and the available capacity in the Distribution System to provide the connection that you require.

**Stage 3 – Our Connection Offer**

2.13 This is our formal written offer to you to provide the connection to the Distribution System. This offer will set out the terms and the Connection Charge for making the connection. The Connection Offer may be accepted by you in accordance with its terms at any time within the Validity Period set out in our Connection Offer, providing it is not, or does not become an Interactive Connection Offer as described in paragraphs **Error! Reference source not found.** to **Error! Reference source not found.**. You should note that the price provided by us at this stage may vary considerably from any previous Budget Estimates or Connection Offers.

**Stage 4 – Acceptance of our Connection Offer**

2.14 If you wish to accept our Connection Offer to the Distribution System you must:

- accept that offer in accordance with its terms within the Validity Period;
- pay any outstanding Connection Offer Expenses invoice; and
- make any required payment due on acceptance by the means specified in our Connection Offer.

2.15 A valid acceptance of our Connection Offer will create a legally binding agreement between us.

**Stage 5 – Construction of the required works by us**

2.16 At this stage we will carry out the construction work, subject to the terms of the accepted Connection Offer, to provide the new connection. We will maintain appropriate liaison with you during the planning and execution of the works.

2.17 Supply Numbers (Metering Point Administration Numbers or 'MPANs') will be issued before the connection works are completed, so that you can make arrangements with your Supplier. On completion of this stage, the work required to provide the connection will have been installed and will be available for use.

## Cost Breakdown

2.18 For Connection Offers that include Contestable Work with a Connection Charge in excess of £20,000, we will provide a breakdown of costs, that are referable to the tables in Section 7, which will include as a minimum :-

- a description of the works involved, including whether it is an Enhanced Scheme
- the length of underground cable/ overhead line required
- the number of substations required
- information on any Reinforcement works required;
- legal and professional charges associated with the securing of Land Rights.

2.19 Where the Connection Charge is based on the Minimum Scheme and not the Enhanced Scheme that is to be built, a cost breakdown of both the Minimum Scheme and the Enhanced Scheme will be provided in accordance with paragraph 2.18. Where the Connection Charge to you is based on an enhanced connection arrangement requested by you, and not the Minimum Scheme, a cost breakdown of the Minimum Scheme can be provided on request.

2.20 Where requested by you, we will provide details of how any cost apportionment factors have been calculated.

## Interactive Connection Applications

2.21 There are occasions where we receive two or more applications for connection which make use of the same part of the Distribution System. These may become "Interactive Connection Applications", resulting in additional costs. We have a strict process to ensure fairness and this process is detailed below.

2.22 The process for managing two or more "Interactive Connection Applications" will be as described below. The following definitions are used in this Section.

| | |
|---|---|
| **Affected Parties** | all Customers whose Connection Offer(s)/ POC Offer(s) have been identified by us as being interactive. |
| **Application Date** | the date upon which we receive all the information (see 2.7.) we require in respect of an application. |
| **Calendar Days** | Any day. |
| **Committed Network** | means assets that are not yet installed and commissioned on our Distribution System, but which are planned to be so as a result of other Connection Offer(s)/ POC Offer(s) which have been made by us and accepted by other applicant(s). |
| **Conditional Interactive Offer** | An Interactive Offer that is dependent on some or all previously issued and related Interactive Offers not being accepted. |
| **Connection Offer** | is as described in 1.13. |
| **Existing Network** | means our currently installed and commissioned Distribution System. |
| **Interactive Connection Applications** | arise where we receive two or more applications for connection which make use of the same part of the Existing Network or Committed Network or otherwise have a material operational effect on that network such that there is or would be a material impact on the terms and conditions of any Connection Offer/ POC Offer made in respect of such connections. |

| | |
|---|---|
| **Interactive Connection Offers** | are Connection Offers/ POC Offers made in respect of Interactive Connection Applications. |
| **Interactive Queue** | the queue of Affected Parties in receipt of Interactive Connection Offer(s) as defined by us. |
| **Legacy Date** | The original Application Date of an Unsuccessful Applicant that may be retained and carried forward by the Unsuccessful Applicant if they reapply for a new Connection Offer on the same or amended terms during the Reapplication Period, that will be used to determine their relative position in any subsequent Interactive Queue(s) in which they become an Affected Party. |
| **Notice of Interactivity** | a notice issued by us in accordance with paragraph **Error! Reference source not found.**. |
| **POC Offer** | is as described in 1.14. |
| **Reapplication Period** | A period of working days of notification of an unsuccessful acceptance. The Unsuccessful Applicant can reapply for a new Connection Offer on the same or amended terms as their withdrawn Interactive Connection Offer and can retain their Legacy Date as the basis for determining their relative position in any subsequent Interactive Queue(s) in which they become an Affected Party. |
| **Unconditional Interactive Offer** | An Interactive Offer that is not dependent on any other Offers. |
| **Validity Period** | The period of time which the Offer will be open for acceptance after which time it will, if not accepted, automatically expire. |
| **Working Day** | means any day other than a Saturday, a Sunday, Christmas Day, Good Friday or a day which is a bank holiday within the meaning of the Banking and Financial Dealings Act 1971. |

2.23 We will identify where the making of a new Connection Offer(s)/ POC Offer(s) would (if accepted) affect the terms of other unaccepted Connection Offer(s)/ POC Offer(s). We will notify all Affected Parties at the same time that their Connection Offer/ POC Offer is or has become interactive.

2.24 At the time of making any Connection Offer(s)/ POC Offer(s) that trigger interactivity all Affected Parties will receive a "Notice of Interactivity". The Notice of Interactivity shall:

a) inform the Affected Parties in writing:

- that there is another Connection Offer(s)/ POC Offer(s) outstanding, the acceptance of which might affect the terms of any Connection Offers/ POC Offers made
- that their Connection Offers/ POC Offers are interactive;
- that the validity period of the Offer has been reduced to 30 days from the date of issue of the notice
- whether their Interactive Connection Offers / POC Offers are Unconditional or Conditional;
- their respective positions in the Interactive Queue, determined by the Application Date; and
- the process for accepting Interactive Connection Offers.

- .

b) make all Conditional Interactive Connection Offers conditional upon the other(s) not having been accepted; and

c) reduce the validity period of the Connection Offer / POC Offer to 30 days from the date of issue of the notice. If there is less than 30 days validity period remaining, then the remainder of the original validity period will remain.

2.25 The Interactive Queue shall be comprised of the Affected Parties, and an Affected Party's position in the Interactive Queue will be determined by the Application Date. The Affected Party with the earliest Application Date amongst the Affected Parties will be first, the Affected Party with the next earliest Application Date will be second, and so on. If two or more Affected Parties have the same Application Date, they will be given the same (joint) position in the Interactive Queue.

2.26 Upon receipt of an Interactive Connection Offer acceptance, we will notify all other Affected Parties that their Connection Offer(s) are withdrawn. Following the withdrawal of an interactive Connection Offer the Applicant shall have the option to re-apply for a new Connection Offer on the same or amended terms during the Reapplication Period in which case we will issue a new Connection Offer to the Applicant. The Legacy Date will be used to determine their relative position in any subsequent Interactive Queue(s) in which they become an Affected Party.

2.27 If more than one Interactive Construction Offer acceptance is received on any given day, the Affected Party who has the earliest position in the Interactive Queue consistent with paragraph **Error! Reference source not found.** will be considered to be a valid a cceptance. If two or more Affected Parties have the same Application Date, and therefore hold the same position in the Interactive Queue, the first of such Affected Parties to submit their acceptance to us will be considered to be a valid acceptance.

## Transitional arrangements

2.28 A Connection Offer issued by us will include a Connection Charge calculated in accordance with our Connection Charging Methodology, which is current at the time of issue. If you accept our Connection Offer and the connection work is completed within the prescribed periods set out in it, the Connection Offer shall remain valid even if our Connection Charging Methodology should change, by approval of the Authority, in the interim period between acceptance of the Connection Offer and completion of the connection work

## Small Scale Embedded Generation

2.29 Small Scale Embedded Generation (SSEG) is defined as a source of electrical energy rated up to and including 16 Amperes per phase, single or multi-phase, LV and designed to operate in parallel with our Distribution System. If you install a SSEG unit (typically domestic combined heat and power units, domestic photovoltaic and domestic wind turbines), you must, in accordance with statutory requirements, advise us of your intention to utilise the SSEG installation no later than 28 days (inclusive of the day of commissioning), after its commissioning.

2.30 Engineering Recommendation G98/1-4 entitled "Requirements for the connection of Fully Type Tested Micro-generators (up to and including 16 A per phase) in parallel with public Low Voltage Distribution Networks on or after 27 April 2019" is published by the Energy Networks Association (ENA). It sets out the technical requirements for the connection of SSEG units. For further information visit either the ENA web-site (www.energynetworks.org) or our own web-site (www.westernpower.co.uk).

2.31 For the connection of other types of generator please follow the process above so we can make an offer to connect your generator. Further information can be found in our Distributed Generation Connections Guide which can be accessed from our website.

## Embedded Networks

2.32 Any person wishing to build a distribution network requiring a connection to our Distribution System should apply to us using the processes set out in either Section 2 or Section 3.

2.33 We accept and shall work to Engineering Recommendation G88 entitled; "Principles for the planning, connection and operation of electricity distribution networks at the interface between Distribution Network Operators (DNOs) and Independent Distribution Network Operators (IDNOs)", published by the ENA.

2.34 A Bilateral Connection Agreement will be required between us and the connected party, setting down the specific terms and conditions for connection that will apply in relation to the connection for the long term. While such terms and conditions will be consistent with our Connection Charging Methodology, the Bilateral Connection Agreement will take precedence.

# Section 3 – Applying for a connection where an ICP undertakes the Contestable Work

This Section applies where you wish to appoint an ICP to undertake any Contestable Work. Section 2 applies where you want us to undertake all the works necessary to provide your connection. You may make a request under Section 2 and Section 3 at the same time.

## Introduction

3.1 As set out in paragraphs 2.1 to 2.3, any person may apply for a connection to our Distribution System.

3.2 You may choose to appoint an ICP to carry out Contestable Work. If you do, we may require you to confirm such appointment in writing.

3.3 We must be satisfied that the ICP has sufficient accreditation to carry out the Contestable Work to the required standards. You may appoint an ICP accredited for the appropriate work categories under the National Electricity Registration Scheme presently operated by Lloyds Register. Details of the National Electricity Registration Scheme are available from the Lloyds Register website at http://www.lloydsregister.co.uk/Schemes/NERS/

3.4 If you do appoint an ICP to undertake the Contestable Work, we will carry out and charge you for the Non-Contestable Work. We will also charge for carrying out various services associated with the Contestable Work; for example approval of the design of the assets to be adopted. These are collectively known as the CIC Charges and they will be identified in any POC Offer that we provide.

3.5 An explanation of the works that are categorised as 'Contestable' and 'Non-Contestable' by us is provided in Section 6. Further information relating to the process is also available from our website

http://www.westernpower.co.uk

Click on "Connections" within our home page and follow the links.

## Procedure for getting a connection

3.6 A person seeking a new or modified connection should contact us as detailed below.

Records Team

Western Power Distribution
3rd Floor
Toll End Road
Tipton
DY4 0HH

Tel: 0845 0727270
e-mail: wpdnewsuppliesmids@westernpower.co.uk

3.7 We will submit a POC Offer to you or your appointed ICP. The POC Offer will, on acceptance, form the construction agreement which covers the Non-Contestable Work we will undertake. We will enter into an Adoption Agreement with the relevant parties. These agreements will need to be signed and exchanged before any work is undertaken.

3.8 The POC Offer will be sent as soon as reasonably practicable, and we will take all reasonable steps to meet the timescales indicated within the table below once we have received your completed application. In addition to the terms for making the connection we will specify the proposed POC to our Distribution System and details of the work to be carried out by us.

3.9 Appendix 1 of Standard Licence Condition 15 of our Licence details the standards of performance that we must take all reasonable steps to comply with when providing the POC Offer, design approval, connection and Energisation of the connection. These are repeated in the table below:

| **Provision of POC Offers** | **Performance level** |
|---|---|
| (a) low voltage demand: for a new demand connection to our Distribution System where the highest voltage of the assets at the POC and any associated works is not more than one kilovolt. | within fifteen Working Days of receiving the request |
| (b) low voltage generation: for a new generation connection to our Distribution System where the highest voltage of the assets at the POC and any associated works is not more than one kilovolt. | within thirty Working Days of receiving the request |
| (c) high voltage demand: for a new demand connection to our Distribution System where the highest voltage of the assets at the POC and any associated works is more than one kilovolt but not more than 22 kilovolts. | within twenty Working Days of receiving the request |
| (d) high voltage generation: for a new generation connection to our Distribution System where the highest voltage of the assets at the POC and any associated works is more than one kilovolt but not more than 22 kilovolts. | within fifty Working Days of receiving the request |
| (e) extra high voltage demand: for a new demand connection to our Distribution System where the highest voltage of the assets at the POC and associated works is more than 22 kilovolts but not more than 72 kilovolts. | within fifty Working Days of receiving the request |
| (f) other connections: for a new demand connection or generation connection to our Distribution System that is not included within the preceding sub-paragraphs. | within three months of receiving the request |

The link below will take you to our website where further information is available:

http://www.westernpower.co.uk

Click on "Connections" within our home page and follow the links.

## Information Required

3.10 When you make your application to us you should provide the information set out below. In some cases, it is possible that additional information will be required and we will notify you of this when we have assessed your requirements.

3.11 If you do not provide the information we need it will prevent us from dealing with your enquiry as quickly as we would like, so please provide the information indicated on our application form. The information we require will vary depending on the nature of your connection request. Typically we require the following details:

- Your name and correspondence address and other contact details.
- The Premises address.

- Whether you require a Budget Estimate or a formal POC Offer. A formal POC Offer is a contractual document and more appropriate once you are in a position to decide whether the project can proceed to the construction phase.
- A site location plan showing the site boundary, indicating where the connection(s) are required.
- The Required Capacity.
- The date by which you require the connection to be made.
- The characteristics of the connections, e.g. demand, generator or for a licensed, embedded network. Further information on generation connections can be found in our Distributed Generation Connections Guide which can be accessed from our website.
- Any information you have in respect of equipment which may interfere with our Distribution System or the supply of electricity to others (e.g. apparatus which can cause voltage fluctuations, such as large motors associated with air conditioning systems, lifts, cranes, hoists and other similar plant; or apparatus which can produce harmonics, such as uninterruptible power supplies or electronic control systems).

3.12 An application form can be downloaded from our website, http://www.westernpower.co.uk

Click on "Connections" and follow this link.

## Budget Estimates

3.13 If you make an enquiry of a provisional nature we can provide an indication of the charge for providing the connection in a Budget Estimate. We will not carry out any detailed design work and the assessment will be carried out as a desk top exercise. Any estimate that we provide at this stage will be the result of a preliminary assessment only and possibly without any site specific considerations being taken into account. You should note that the estimate that we provide at this stage may vary considerably from any further Budget Estimates or the price in any formal POC Offer. A Budget Estimate is not a formal offer for connection and cannot be accepted by you. See Section 7, Part A for charges associated with the provision of Budget Estimates.

## Feasibility Studies

3.14 We may undertake at your request, generally for more complex connections, a Feasibility Study to consider a number of options for connection and provide estimated costs for each option as appropriate. Any cost estimated at this stage will be purely indicative and not binding. The price in any formal POC Offer to you may differ from it. A Feasibility Study is not a formal offer for connection and cannot be accepted by you. See Section 7, Part B for charges associated with the provision of Feasibility Studies.

## POC Offers - How is your formal application handled?

3.15 You do not need to have requested a Budget Estimate or Feasibility Study before you request a formal POC Offer. When you require a connection to our Distribution System and propose to use an ICP to carry out the Contestable Work, the ICP may make an application on your behalf. The request will be dealt with in five key stages, as follows:

**Stage 1 - Your Application**

3.16 We will only be able to progress your application once you have provided us with the information we require (see 3.11). We will notify you within five Working Days if we

require any additional information in order to process your application. Where applicable, we will also notify you in writing that you will be required to pay Connection Offer Expenses (see also paragraphs 4.11-4.13), as set out in Section 7, whether or not you accept your Connection Offer. If you inform us within 10 working days that you do not wish to proceed, we will not charge you. If you inform us after the 10 days, we may charge you according to how much time we have spent assessing the application.

3.17 If you choose to appoint an ICP to carry out the Contestable Work then the POC will be based on the information provided to us by the ICP and will be determined by us taking into account the ICP's requirements and our wider obligations. For larger demand and generator connections more than one POC may need to be assessed. A table showing our indicative charges for assessing the POC is given in paragraph 7.16. These charges will be included within the POC Offer.

**Stage 2 – Design**

3.18 Our design of the Non-Contestable Work and the identification of the POC will take into account the location of the Premises for which a connection is required, its proximity to our Distribution System, and the available capacity in our Distribution System to provide the connection that you require.

**Stage 3 – Our POC Offer and the Adoption Agreement**

3.19 This is our formal written offer to you to provide the connection to our Distribution System. This POC Offer will set out the terms and the price upon which we will make that connection, whilst the Adoption Agreement will set out the terms for adoption of assets installed by an ICP. The POC Offer that we make to you may be accepted by you in accordance with its terms at any time within the Validity Period set out in our POC Offer. You should note that the price provided by us at this stage may vary considerably from previous Budget Estimates.

**Stage 4 – Acceptance of our POC Offer**

3.20 If you wish to accept our POC Offer to connect to our Distribution System, you must

- accept that POC Offer in accordance with its terms within the Validity Period;
- obtain design approval from us for the Contestable Work in the timescales specified;
- pay any outstanding Connection Offer Expenses invoice;
- make any required payment due on acceptance by the means specified in our POC Offer; and
- return the signed Adoption Agreement in the timescales specified.

3.21 A valid acceptance of our POC Offer will create a legally binding agreement between us. Where the terms of the Adoption Agreement have been unaltered, we will sign the Adoption Agreement and return a copy to the relevant parties.

**Stage 5 - Construction by us and the ICP**

3.22 At this stage we carry out construction of the Non-Contestable Work and the ICP carries out construction of the Contestable Work we will carry out routine inspections of the Contestable Work as it is installed. Shortly before the Contestable Work is ready for connection to the Distribution System your appointed ICP must contact us so that we can arrange a date to connect the Contestable Work. Subject to the provision of any required documentation and the satisfactory completion of any required tests we shall connect the Contestable Work to our Distribution System and adopt the assets. Supply Numbers (Metering Point Administration Numbers or 'MPANs') will be issued before the connection works are completed, so that arrangements can be made with the Supplier. On completion of this stage, the Extension Assets and Entry/ Exit Point(s), as appropriate, will have been commissioned and will be available for use.

## Cost Breakdown

3.23 For all POC Offers comprising Non-Contestable Work only, we will provide a breakdown of costs, that are referable to the tables in Section 7, which will include as a minimum :-

- a description of the works involved, including whether it is an Enhanced Scheme
- the length of underground cable/ overhead line required
- the number of substations required
- information on any Reinforcement works required;
- legal and professional charges associated with the securing of Land Rights.

3.24 Where the Connection Charge is based on the Minimum Scheme and not the Enhanced Scheme that is to be built, a cost breakdown of both the Minimum Scheme and the Enhanced Scheme will be provided in accordance with paragraph 3.23. Where the Connection Charge to you is based on an enhanced connection arrangement requested by you, and not the Minimum Scheme, a cost breakdown of the Minimum Scheme can be provided on request.

3.25 Where requested by you, we will provide details of how any cost apportionment factors have been calculated.

## Interactive Connection Applications

3.26 The process for managing two or more "Interactive Connection Applications" will be as set out in paragraphs **Error! Reference source not found.** to **Error! Reference source no t found.**.

## Transitional arrangements

3.27 A POC Offer issued by us will include a Connection Charge calculated in accordance with our Connection Charging Methodology, which is current at the time of issue. If you accept our POC Offer and the connection work is completed within the prescribed periods set out in it, the POC Offer shall remain valid even if our Connection Charging Methodology should change, by approval of the Authority, in the interim period between acceptance of the POC Offer and completion of the connection work.

# Section 4 – Information specific to us

## Introduction

4.1 This Section sets out further information regarding obtaining a connection which is specific to us.

## Connection Offer and POC Offer Validity Periods

4.2 Any Connection Offer given is normally open for acceptance for ninety days after which it will automatically expire. The Connection Offer is also given on the understanding that the connection is started and completed within a determined period of time. The period will vary according to the type and complexity of the connection. Where the connection is not completed within the determined period of time, or agreed milestones are not met during the course of the connection work due to any act, default or omission by you, we will reserve the right to withdraw the Connection/POC Offer and make a new Connection/POC Offer under such terms and conditions as are appropriate at the time.

## Increase or decrease in Required Capacity

4.3 If you wish to increase or decrease the Required Capacity of an existing connection you can make a request by submitting an Application Form to us at the address given in paragraph 2.4.

4.4 Any request to increase the Required Capacity will be considered by us and you will be informed whether the additional load is immediately acceptable or whether Reinforcement work must first be carried out. Any costs for reinforcing our Distribution System will be charged for in accordance with Section 5 of this document. Where applicable, we will also notify you in writing that you will be required to pay Connection Offer Expenses (see also paragraphs 4.11-4.13), as set out in Section 7, whether or not you accept your Connection Offer. If you inform us within 10 working days that you do not wish to proceed, we will not charge you. If you inform us after the 10 days, we may charge you according to how much time we have spent assessing the application.

4.5 Any increase or decrease in Required Capacity shall normally be formally agreed by the implementation or variation of a Connection Agreement.

4.6 No decrease in Required Capacity for import shall take effect earlier than twelve months from the date of original connection, or twelve months from the last variation made to the Required Capacity for import.

## Temporary De-energisation

4.7 An electrical installer may request we temporarily De-energise and subsequently Re-energise our Distribution System to enable that person to work on your own wiring and equipment safely. We typically require 10 working days notice to provide this service and a charge will apply. If the connection is rated at 100 A or less and is connected at low voltage (less than 1000 V) we can, at your request, install a double pole isolation switch between the metering and your installation which allows the electrical installer to Re-energise the supply once their work is complete. We will retain ownership of the double-pole switch. A charge is made for providing this service. See our website for further details (www.westernpower.co.uk).

## Capacity of Domestic Connections

4.8 All new domestic connections for non-electrically heated dwellings will have the ability to deliver a maximum capacity of 15kW, unless agreed otherwise with the applicant. (This does not imply that a generator with a rated output of 15kW can be accepted on that connection).

## Large Low Voltage Connections

4.9 We will normally provide connections up to 1000kVA at low voltage. However we will take into account your particular requirements for a connection at high voltage and any disturbing loads (such as large motors or welding equipment) you wish to connect, together with the possibility of any future load increase in determining the voltage at which the connection is given.

## Helpful Advice for Reducing Your Connection Charge

4.10 Your Connection Charge will be based on the estimated costs of the Minimum Scheme. However we are happy to discuss with you ways of reducing your connection charge. The list below identifies some of these, which you may wish to consider.

- If you can provide full details of your load requirements when you make your application this will keep the time to a minimum in designing and producing a Connection Offer. Please remember that you have a legal obligation to provide all relevant information regarding your existing and/or proposed load details.

- Connection Offers are provided subject to the availability of any necessary legal consents, however, if you are able to provide assistance in these matters, this may help to reduce your connection charge.

- You may wish to consider carrying out the excavation works on your land, for instance the provision and installing of suitable ducts together with any road crossing ducts as necessary.

- Accepting a service position as close to the distribution system as possible will result in the service cable length being kept to a minimum which in turn will reduce the amount charged by us.

- If a substation is required for your connection(s) you may wish to consider the following: -
  - a Can the substation site/land be provided at no cost to us?
  - b Is the substation site to be provided in the optimum position? (this will be in agreement with us)
  - c Can you construct a substation base and building? (these will be in accordance with our specifications)
  - d Can you provide suitable routes for any cables/overhead lines across your property?

# Calculation of Assessment and Design charges

## Recovery of costs

4.11 We may charge you for the time we spend preparing the Connection Offer in accordance with the Electricity (Connection Offer Expenses) Regulations 2018 (the 'Regulations'). This charge is commonly termed the 'Assessment and Design charge'.

4.12 The Regulations require you to pay expenses relating to the application that have been reasonably incurred by us in doing any of the following:-

*(a) assessing the impacts of the connection on the distribution system;*

*(b) assessing the impacts of the connection on a transmission system;*

*(c) designing the connection, including, in particular—*

*(i) designing any reinforcement works required to add capacity to the distribution system;*

*(ii) designing any reinforcement works required to add capacity to a transmission system;*

*(iii) designing any required extension of the distribution system;*

*(iv) designing any required extension of a transmission system;*

*(d) processing the application including, but not limited to, preparing the information to be included in the notice under this paragraph and the notice given under section 16A(5) of the Act.*

4.13 The Assessment and Design charge includes the costs of checking, clarifying and registering the application in our system, identifying any Interactive Queue, network studies to establish the Point of Connection, designing and cost estimation of the solution, internal approval processes, preparation of the Connection Offer and any necessary liaison with NGET.

4.14 Our Assessment and Design charge does not include any fees charged to us by NGET to assess the impact of your application on the GB Transmission System (see also paragraph 5.43 – 5.44A.).

4.15 The same Assessment and Design charge is made irrespective of whether Reinforcement work is included in the final Connection Offer. This means that the charge is more predictable for the customer making the application.

## Application of the Assessment and Design charge

4.16 The amount we charge will vary according to the complexity of the scheme based upon your requested capacity and the type of assets required to enable the connection. The level of Assessment and Design charge and whether it is required on issue of the Connection Offer is shown in tables C and D of Section 7.

4.17 The Assessment and Design charge may increase if you ask us to undertake any additional work following receipt of your original application.

4.18 In some cases, in accordance with the Regulations you will be required to pay the Assessment and Design charge associated with the issue of the Connection Offer, irrespective of whether or not you accept the Connection Offer.

4.19 In other cases all of the Assessment and Design charge is paid by you only on acceptance.

4.20 Where we require you to pay an Assessment and Design charge for the Connection Offer, you will be notified and given a 10 working day cooling off period. If you cancel the application within this 10 working day period, you will not be liable for the Assessment and Design charge. If you do not cancel the application within the 10 working day cooling off period then you will be liable for a non refundable charge whether or not the Connection Offer is issued.

4.21 If you accept our Connection Offer but subsequently cancel, the Assessment and Design charge will not be refunded.

## Basis for calculation of charges

4.22 Our Assessment and Design charge is calculated based on the average time spent by the relevant staff in undertaking each of the activities detailed in 4.13 above for different categories of connection. Hourly rates appropriate to the task are attributed and used to calculate the average cost of preparing a Connection Offer for each category of connection. This is based on a typical connection in each category, recognising that some Connection Offers will be simpler and quicker to prepare, whilst others will be more complex and therefore take longer.

4.23 An associated indirect cost is applied to these staff costs to recover those costs that are not directly attributable (e.g. business support costs); this indirect cost is consistent with that applied to construction activities.

# Section 5 – Common Connection Charging Methodology

This Section sets out the Common Connection Charging Methodology that is implemented to ensure a consistent approach in the way your Connection Charge is calculated.

## Minimum Scheme

5.1 The Minimum Scheme is the Scheme with the lowest overall capital cost (as estimated by us), solely to provide the Required Capacity. The Minimum Scheme will be subject to:

- accepted industry standards, including the requirements of the Distribution Code;
- the status and configuration of the Relevant Section of Network (RSN);
- the standard sizes and types of equipment currently used by us on our Distribution System which shall be reasonable in all the circumstances;
- maintaining our ability to minimise regulatory penalties associated with the Interruptions Incentive Scheme and the Guaranteed Standards of Performance; and
- where the Customer is an LDNO, maintaining the Customer's ability to minimise regulatory penalties associated with the Guaranteed Standards of Performance.

and shall be consistent with our statutory and licence obligations including the requirement to develop, maintain and operate an efficient, co-ordinated and economical electricity Distribution System.

5.2 We will make available our design policies and standards as appropriate.

5.3 Subject to paragraphs 5.4 and 5.7 below, we will calculate the Connection Charge based on the estimated costs of the Minimum Scheme.

5.4 In certain circumstances we may decide to design an Enhanced Scheme. This will include one or more of the following:

- additional assets not required as part of the Minimum Scheme;
- assets of a larger capacity than required by the Minimum Scheme;
- assets of a different specification than required by the Minimum Scheme.

5.5 If we decide to design an Enhanced Scheme, the Connection Charge that will apply will be the lower of the Connection Charge associated with the Minimum Scheme and the Connection Charge associated with the Enhanced Scheme.

5.6 The Connection Charge associated with the Enhanced Scheme will be calculated subject to the exclusion of costs of any additional assets not necessary for the provision of your connection.

5.7 We may recover the reasonable costs incurred, both direct and indirect, in providing a connection and may, where allowed by our Licence, apply a margin on some of those costs. The factors taken into account by us to calculate the Connection Charge will include, but are not limited to:

- Industry standards governing the Distribution System;
- the Required Capacity;
- available capacity of the existing Distribution System;
- whether any necessary extension or Reinforcement of the existing Distribution System is by underground cable or overhead lines;

- whether any diversionary work is required as a result of the development and the required disconnection of any assets;
- the length of cable or line required;
- type of ground requiring excavation, the type and extent of reinstatement necessary (including New Roads and Street Works Act requirements and any other relevant legislation), and the need for road, bridge crossings etc;
- any Electrical Plant and civil costs required, allowing for any civil works undertaken by you with our agreement;
- the cost of installing communication equipment;
- the costs of installing system management equipment;
- the requirement to work outside of normal working hours;
- the costs of undertaking the design;
- the costs of securing wayleaves/easements for plant, cables or lines including any consents;
- the costs of securing suitable substation sites including any necessary Land Rights;
- any overhead line surveys required;
- the costs of public enquiries and environmental impact studies;
- charges for any other costs associated with the work on Sites of Special Scientific Interest (SSSI), railway lines etc; and
- any variations in respect of the actual costs that were reasonably incurred as specified in the Connection Offer.

## Cost Allocation

5.8 The costs to be charged to you as a Connection Charge may be split into three categories:-

- Costs for providing the connection which are to be paid in full by you (see paragraphs 5.10 to 5.15);
- Costs for providing the connection which are to be apportioned between you and us (see paragraphs 5.16 to 5.28; and
- Costs to be paid by you in respect of works that have previously been constructed or are committed and are used to provide the connection (see paragraph 5.29).

5.9 Some costs may be borne in full by us and will not be included in your Connection Charge (see paragraphs 5.30 to 5.32).

## Costs to be paid in full by you

5.10 The costs of providing Extension Assets are charged in full to you.

5.11 Where you have requirements for additional security or the characteristics of your load requires us to install assets in excess of the Minimum Scheme then you will pay the costs in excess of the Minimum Scheme in full. Where you have requested a three-phase connection and/or a supply voltage that is not necessary to meet the Required Capacity, and the local Distribution System is not of the requested number of phases and/or voltage, then you will pay in full the cost of Reinforcement of the Distribution System to your specified number of phases and/or voltage.

5.12 The costs of the future operation and maintenance of any additional assets requested by you (over and above those associated with the Minimum Scheme) will be payable in full. This would normally be levied as a one-off charge representing the net present

value of the future operation and maintenance costs and calculated as a percentage (specified in Section 6) of the additional capital cost of the Scheme. See Example 3 for an illustration of where you request additional security.

5.13 Work required to reconfigure the Distribution System to meet your requirements where no additional Network or Fault Level Capacity is made available shall be charged in full to you. See Example 8D.

5.14 Where the Extension Assets would normally require the extension of existing switchgear equipment and this is not possible, the cost of the full replacement of the switchgear (using the nearest standard size) will be charged to you, provided that there is no Reinforcement of the Distribution System (see paragraph 5.20).

5.15 For generation connections only, Reinforcement costs in excess of the high-cost project threshold of £200/kW shall be charged to you in full as a Connection Charge. In circumstances where the voltage rule detailed in paragraph 5.30 also applies, the voltage rule will take precedence.

## Costs to be apportioned between you and us

5.16 Reinforcement is defined as assets installed that add capacity (network or fault level) to the existing shared use Distribution System. The costs of Reinforcement shall be apportioned between you and us. The methods used to apportion the costs of Reinforcement are set out in paragraphs 5.23 – 5.28. There are five exceptions to this rule. Where an exception applies Reinforcement will treated as Extension Assets and costs will not be apportioned. These exceptions are described below and the application of exceptions 1, 2, 4, and 5 is demonstrated in the Examples.

5.17 Exception 1: Where the Reinforcement is:

- down stream of the POC; and
- over and above the Minimum Scheme; and
- provided at our request; and
- provided by connecting two points on the existing Distribution System; and
- there is little or no prospect of the capacity created being required within the next five years,

then the apportionment rules will not apply. You will pay the costs associated with the Minimum Scheme and we will pay the costs over and above the Minimum Scheme. See Example 2B.

5.18 Exception 2: Where the Reinforcement is in excess of the Minimum Scheme and is at your request, the Reinforcement will be treated as Extension Assets and the apportionment rules will not apply. The costs in excess of the Minimum Scheme will be borne in full by you (see paragraphs 5.11 and 5.12 above).

5.19 Exception 3: Where the Reinforcement is provided to accommodate a Temporary Connection the Reinforcement will be treated as Extension Assets and the apportionment rules will not apply. The costs associated with the Temporary Connection will be borne in full by you. Temporary Connections are defined as connections that are only required for a period of up to five years, but exclude connections to provide the initial connection to a development, where the Reinforcement will subsequently be required for the permanent connection.

5.20 Exception 4: Where the replacement of switchgear results in an increase in fault level capacity and:

- that increase is solely as a result of the fault level rating of the standard switchgear equipment used by us being higher than that of the existing switchgear; and
- that increase in fault level capacity is not needed to accommodate your connection.

then, unless the switchgear adds network capacity and the Security CAF applies, the switchgear replacement will be treated as Extension Assets and the apportionment rules will not apply. You will pay the full cost of the switchgear replacement. See Example 7B.

5.21 Exception 5: Where the Reinforcement:

- is provided by connecting two points on the existing distribution system; and
- is providing connection to a development with a number of Entry/ Exit Points,

then the additional network length (measured from suitable points close to the site boundaries which would allow for a clear demarcation of Contestable and Non-Contestable Work) required to provide connectivity within the development will be considered to be Extension Assets and the apportionment rules will not apply. You will pay the full cost of the additional network length. See Example 8B.

5.22 For avoidance of doubt, where the costs of Reinforcement are borne in full by you and any capacity created is used to accommodate new or increased connections within the ECCR Prescribed Period, the ECCR will apply (see paragraphs 5.35- 5.38).

5.23 The costs of Reinforcement will be apportioned using one of two Cost Apportionment Factors (CAFs), dependent upon which factor is driving the requirement for Reinforcement:

- The 'Security CAF'; and
- The 'Fault Level CAF'.

5.24 The following definitions are used in the application of the CAFs.

| | |
|---|---|
| **Existing Capacity** | For existing Customers their Existing Capacity will be either:-<br>a) the Maximum Capacity used in the calculation of their use of system charges; or<br>b) for Customers who are not charged for use of system on the basis of their Maximum Capacity the lower of:<br>• No. of phases x nominal phase-neutral voltage (kV) x fuse rating (A); and<br>• The rating of the service equipment. |
| **Fault Level Contribution from Connection** | is the assessment of the Fault Level contribution from the equipment to be connected taking account of its impact at the appropriate point on the Distribution System. Where an existing Customer requests a change to a connection then the "Fault Level Contribution from Connection" is defined as the incremental increase in Fault Level caused by the Customer. |
| **New Fault Level Capacity** | is the Fault Level rating, following Reinforcement, of the equipment installed after taking account of any restrictions imposed by the local network Fault Level capacity. For the avoidance of doubt this rule will be used for all equipment types and voltages. |
| **New Network Capacity** | Is either the secure or non-secure capacity of the Relevant Section of Network (RSN) following Reinforcement. Whether secure or non-secure capacity is applicable depends upon the type of capacity that can be provided from the RSN. For example, if the capacity provided to the Customer by the RSN is secure, but the capacity requested |

| | |
|---|---|
| | by the Customer at the point of connection is non-secure, the secure capacity will be used. See Example 12.<br>The capacity to be used will be based on our assessment of the thermal ratings, voltage change and upstream restrictions and compliance with our relevant design, planning and security of supply policies. The equipment ratings to be used are the appropriate operational rating at the time of the most onerous operational conditions taking account of seasonal ratings and demand. |
| **Relevant Section of Network (RSN)** | is that part or parts of the Distribution System which requires Reinforcement. Normally this will comprise:<br>· the existing assets, at the voltage level that is being reinforced, that would have been used to supply you (so far as they have not been replaced) had sufficient capacity been available to connect you without Reinforcement; and/or<br>· the new assets, at the same voltage level, that are to be provided by way of Reinforcement.<br>Where it is unclear what assets would have supplied the customer in the event that sufficient capacity has been available, the existing individual assets with the closet rating to the new assets will be used. See Example 13.<br>There may be more than one RSN, (e.g. at different voltage levels). |
| **Required Capacity** | is the Maximum Capacity agreed with the Customer. In the case of multiple connections (e.g. a housing development) it may be adjusted after consideration of the effects of diversity. Where an existing Customer requests an increase in capacity then it is the increase above their Existing Capacity. |

5.25 The 'Security CAF' is applied, where the costs are driven by either thermal capacity or voltage (or both) as assessed against the relevant standard. This rule determines the proportion of the Reinforcement costs that should be paid by you as detailed below.

$$\text{Security CAF} = \frac{\text{Required Capacity}}{\text{New Network Capacity}} \times 100\% \qquad \text{(max 100\%)}$$

5.26 The 'Fault Level CAF' is applied, where the costs are driven by Fault Level restrictions. This rule determines the proportion of the Reinforcement costs that should be paid by you as detailed below.

$$\text{Fault Level CAF} = 3 \times \frac{\text{Fault Level Contribution from Connection}}{\text{New Fault Level Capacity}} \times 100\% \text{ (max 100\%)}$$

5.27 For clarity, where you require an augmentation to an existing connection, both the Security and Fault Level CAFs will be based on the increase in Required Capacity and increase in Fault Level Contribution from the connection respectively. Any related increases within the previous three year period will be taken into account in determining the increase in the Required Capacity or increase in the Fault Level Contribution from the connection to be applied within the CAF.

5.28 On some Schemes there may be interaction between the two rules. In such cases, the 'Security' CAF will be applied to costs that are driven by the security requirement. The 'Fault Level CAF' will be applied to costs that are driven by Fault Level requirements. See the Examples for illustrations on the application of the CAFs.

## Recovery of costs for previous works

5.29 Where, in order to provide your connection; ,

- we propose to utilise existing Distribution System assets that were previously installed to provide a connection to another Customer, and
- the other Customer has paid us (either in part or in full) a Connection Charge for those assets or paid an ICP for those assets which were adopted by us.

you may be required to make a payment towards them. The ECCR prescribes the circumstances where such payment is required. Charges for such works only apply where the new connection is provided within the ECCR Prescribed Period.

## Costs to be paid in full by us

5.30 We will fully fund Reinforcement carried out greater than one voltage level above the voltage at the POC to the existing Distribution System.

5.30A We will fully fund Reinforcement carried out to allow the installation of all equipment at an existing premises which remain connected via an existing low-voltage single, two or three phase service fused at 100 amperes or less per phase which is metered with whole-current metering; provided that (to the extent relevant):

- the Reinforcement is carried out to allow the installation of equipment as part of a single application for a single or multiple installations;
- any and all electricity generation equipment installed has a rated output not greater than 16 amperes per phase (or not greater than 16 amperes per phase at any single premises if a single application for multiple installations);
- **any and all equipment installed which does not constitute a modification to the existing service conforms with the technical requirements of the following standards (notwithstanding that the equipment may have an input current that is more than 16 amperes per phase):**
  - BS EN 61000-3-2 Electromagnetic compatibility (EMC). Limits. Limits for harmonic current emissions (equipment input current ≤ 16 A per phase); and
  - BS EN 61000-3-3 Electromagnetic compatibility (EMC). Limits. Limitation of voltage changes, voltage fluctuations and flicker in public low-voltage supply systems, for equipment with rated current ≤ 16 A per phase and not subject to conditional connection

5.30B Where it is necessary to modify a low-voltage single phase looped service for an existing premises, this shall be considered to have remained connected under Paragraph 5.30A above.

5.31 Where another LDNO with a distribution network that is connected to our Distribution System requires an increase in capacity to its distribution network, the voltage at the POC for assessing the one voltage rule will be:

- In the case of a new extension to the network of the other LDNO, the voltage of connection at which the Extension Assets will connect to the other LDNO's network; or
- In the case of additional capacity required in respect of a Customer connected to the existing assets of the LDNO, the voltage at which the Customer connects to the LDNO's network; or

- In the case of additional capacity required to meet general load growth on the LDNO's network then the Reinforcement costs will be borne by us. The LDNO will be required to provide justification in such circumstances.

5.32 The table below illustrates the application of the one voltage rule in relation to Reinforcement. You will be required to contribute towards the cost of any Reinforcement provided at one voltage level above the POC, up to and including the cost of circuit breakers provided at that voltage.

| | **Voltage at the POC** | | | |
|---|---|---|---|---|
| **Voltage of Scheme Assets** | **LV (below 1000V)** | **HV (above 1kV but less than 22kV)** | **EHV (above 22kV but less than 72kV)** | **132kV** |
| **132kV Network** | We fund | We fund[1] | Apportioned | Apportioned |
| **132kV/ EHV Substation** | We fund | EHV circuit breakers only Apportioned | Apportioned | Not applicable |
| **EHV Network** | We fund | Apportioned | Apportioned | Not applicable |
| **132kV/ HV Substation** | HV circuit breakers only Apportioned | Apportioned | Not applicable | Not applicable |
| **EHV/HV Substation** | HV circuit breakers only Apportioned | Apportioned | Not applicable | Not applicable |
| **HV Network** | Apportioned | Apportioned | Not applicable | Not applicable |
| **HV/ LV Substation** | Apportioned | Not applicable | Not applicable | Not applicable |
| **LV Network** | Apportioned | Not applicable | Not applicable | Not applicable |

[1] Except where there is direct transformation from 132kV to HV when the costs are apportioned.

## Additional Cost Allocation for Flexible Connections

5.32A To facilitate a Flexible Connection, we may need to install and maintain specific system management equipment, either or both at your Premises and further upstream in other parts of the Distribution System. Some of the costs associated with installing, operating and maintaining the system management equipment will be directly attributed to your connection and be included as part of your Connection Charge (see illustrative table in paragraph 5.32A). The proportion of the costs which you must fund depends on whether your connection forms part of a Dedicated Scheme or a Wide Area Scheme, as described below:

Type 1 – Dedicated Scheme: A scheme managing constraint(s) where there are no Customers downstream of the constraint(s) who could connect new or additional demand or generation without being controlled by the Dedicated Scheme:

- Type '1A' considers a scenario involving only one customer; and
- Type '1B' considers a scenario involving multiple customers.

Type 2 – Wide Area Scheme: A scheme managing constraint(s) where there are Customers downstream of the constraint(s) who could connect new or additional demand or generation without being controlled by the Wide Area Scheme.

5.32B The table below illustrates the scheme types and methodology for cost recovery associated with each type of Flexible Connection. The methodology covers Type 1A, Type 1B and Type 2 (as each is described in paragraph 5.32A).

| **Typical connection components**[1] | **Type 1A –Single** | **Type 1B – Multiple** | **Type 2 Wide Area** |
|---|---|---|---|
| **Extension Assets for customer** | You fund | You fund | You fund |
| **End user control unit for the customer** | You fund | You fund | You fund |
| **Local system management unit** | You fund | Shared equally between participants | We fund |
| **Scheme management unit** | You fund | Shared equally between participants | We fund |
| **Central Management unit** | N/A | N/A | We fund |
| **Scheme specific ongoing costs e.g. communication** | We fund | We fund | We fund |

[1]We will describe the main connection components within the relevant connection offer, which will also include the funding arrangements for each such connection component (if different to that stated in this illustrative table).

## Recovered Equipment and Deferment of Asset Replacement

5.33 Normally, you will not receive any credit for the value of any equipment recovered by us as a result of the connection. However, where a Temporary Connection is to be Disconnected, we will determine the value of recovered equipment that we can subsequently reuse (net of depreciation and removal and refurbishment costs). Where there is a net value in the recovered equipment that can be reused, we will pay you the amount of such net value subject to a de minimis level as specified in Section 6.

5.34 You will not receive any credit for the value of any deferment of asset renewal expenditure by us.

## Rebates

5.35 For Distribution System assets where you have paid in full, then you may be entitled to a future rebate of charges should another Customer connect to those assets. These circumstances are detailed in the ECCR.

5.36 For Distribution System assets where you have paid in proportion to your Required Capacity, then you are not entitled to a future rebate of charges should another Customer connect to those assets.

5.37 Your entitlement to receive payments under the ECCR only applies to connections made within the ECCR Prescribed Period from the first provision of the connection.

5.38 These provisions do not apply where your connection was made before 6 April 2017 and we have adopted the assets from an ICP. However, for connections made on or after 6 April 2017, these provisions do apply to assets we have adopted from an ICP (as further described in the ECCR).

## Speculative Developments

5.39 Developments which have one or more of the following characteristics may be considered as speculative:-

- their detailed electrical load requirements are not known;
- the development is phased over a period of time and the timing of the phases is unclear;
- the capacity requested caters for future expansion rather than the immediate requirements of (an) end user(s);
- the capacity requested caters for future speculative phases of a development rather than the initial phase(s) of the development; or
- the infrastructure only is being provided, with no connections for end users requested.

5.40 Where we are asked to provide a connection to a speculative development then the cost of the work including any Reinforcement is charged in full and the CAFs do not apply. Additional charges to reflect ongoing operation, repair and maintenance costs may also be levied.

5.41 We may, at our sole discretion, allow capacity to be reserved on the infrastructure provided to service the speculative development on the commercial terms agreed between you and us in respect of the development.

## Connection Alterations

5.42 Where you request an alteration to your connection arrangements, including a change in the supply voltage, the costs are charged in full to you. For the avoidance of doubt increases in the Required Capacity are dealt with in accordance with the previous Sections.

## National Grid Electricity Transmission (NGET) Charges

5.43 We have an obligation under the CUSC to discuss certain requests for connection or changes in connection with NGET. Such requests are typically for large electrical demand or generation projects. Under certain circumstances, as determined by NGET, they may apply charges to assess the potential impact on the transmission system of a request or the combined effect of a number of requests and these will be included in the Connection Charge, or through a separate mechanism agreed between you and us.

5.44 Subsequent to such assessment NGET may also require works to be undertaken on the GB Transmission System as a condition of the connection being permitted. In the event of NGET applying charges for these works, we will reflect these charges in our charges to you.

5.45 Should GB Transmission System works be required, NGET may apply a cancellation charge in the event that your project is cancelled or the capacity of your project reduces. NGET also calculates a secured amount in respect of this cancellation charge (being a percentage of the cancellation charge, which reduces at certain trigger points). We may ask you for security in respect of this cancellation charge, but we will not ask you for more than the secured amount calculated by NGET.

## Land Rights

5.46 Where Land Rights are required from a third party, the cost of acquiring those rights will be included in either the Connection Charge to you or through a separate mechanism agreed between you and us.

5.47 If the Land Rights that we require cannot be obtained by negotiation, we may, following discussion with you, exercise our powers of compulsory purchase (Section 10 and Schedule 3 of the Act) or apply to the Secretary of State or the Scottish Government in Scotland for a 'necessary wayleave' (paragraphs 6-8 of Schedule 4 of the Act). If we do so, the costs that we incur, including those of the Lands Tribunal/ Lands Tribunal for Scotland (which determine issues of compensation) will be charged to you. The Lands Tribunal may award compensation to the landowner and/or anyone who holds an interest in the land and this will be included in the Connection Charge or through a separate mechanism agreed between you and us.

## Unmetered Supplies

5.48 For some street lighting and other installations, we may allow items of equipment to be connected to our Distribution System without a meter. This is subject to the equipment having a low and predictable pattern of consumption and meeting the requirements of The Electricity (Unmetered Supply) Regulations 2001.

5.49 Where we agree that a meter is not required the provision of such a connection is dependent on the owner entering into an unmetered Connection Agreement and providing and maintaining an auditable inventory, in a format agreed with us, so that an accurate estimate of the consumption can be produced.

5.50 Where certain criteria are met the provision of services for unmetered connections may be made via a time-based connection service charge, e.g. Rent-a-Jointer Services. This is subject to us entering into a contract with you for the provision of such services.

5.51 You may elect to appoint an accredited ICP to carry out the Contestable Work for unmetered connections. The ICP will be allowed to carry out live jointing on low voltage, underground cables. Where you use an ICP arrangements must first be established as follows:

- You will enter into an agreement with the ICP to carry out and complete the Contestable work; and
- We will enter into an agreement and or/an Adoption Agreement with you and/or your appointed ICP as appropriate.

## Capacity Ramping for LDNOs

5.52 For an LDNO the Required Capacity (expressed in kVA) is the Maximum Capacity to be provided at the boundary between the LDNO's distribution network and our Distribution System. This value will be agreed with us and stated in the Bilateral Connection Agreement for the relevant embedded network.

5.53 When a connection is provided to an LDNO the take-up of capacity may grow over a period of time as the site develops and individual customers are connected. In such circumstances the Bilateral Connection Agreement shall include a phased Required Capacity based on the Development Phase.

5.54 During the Development Phase a review may be undertaken annually on the anniversary of the Energisation of the embedded network. Any unused capacity identified in such review may be released for use by other customers and the Maximum Capacity reduced to an agreed level within the Bilateral Connection Agreement.

5.55 The Required Capacity agreed with us as being required at the end of the Development Phase shall be used to determine the Required Capacity for determination of the Cost Apportionment Factors where applicable.

5.56 Should additional capacity subsequently be required, the LDNO may incur additional Connection Charges for any Reinforcement based on the increase in capacity.

## Disconnection and De-Energisation

5.57 If we either Disconnect or De-energise your Entry/ Exit Point

- at the request of your Supplier; or
- due to a failure of your Supplier to comply with the terms of the DCUSA

then the cost of such disconnection or De-energisation will be borne by your Supplier.

5.58 If we either Disconnect or De-energise your Entry/ Exit Point

- at your request; or
- due to a failure by you to comply with the terms of your Connection Agreement,

then the cost of such disconnection or De-energisation will be borne by you.

5.59 On termination of your Connection Agreement, we retain the right to remove our Electrical Plant and Electric Lines and charge you if we do so. Apparatus which is not cost effective for us to recover (e.g. Electric Lines laid underground) will normally be made safe and left at the Premises, but if you require us to remove them, the cost of removal will be payable by you. All such apparatus will remain our property unless otherwise agreed in writing.

## Adoption Payments

5.60 Where we adopt assets installed by an ICP we will not make any adoption payment in respect of those assets.

## Competition in Connection

5.61 Where you choose to have any Contestable Work undertaken by an ICP, we levy CIC Charges associated with the design approval, inspection and adoption of the Contestable Works as set out in Section 6 and Section 7.

# Worked Examples Illustrating the Application of the Connection Charging Methodology

The following Examples are to illustrate the application of the Connection Charging Methodology and are not intended to provide an accurate estimate of the charges which a person would become liable in respect of the provision of a connection. The Examples do not necessarily represent the Minimum Scheme for a specific connection application.

The figures quoted in the Examples are illustrative. Section 7 of this statement provides our charges and indicative costs to undertake various activities.

The Examples illustrate where we undertake both the Contestable and Non-Contestable Work. These costs will include the determination of the POC and assessment and design costs, though these may not be explicitly identified in the Examples.

Where Contestable Work is undertaken by an ICP, we will apply CIC Charges for services associated with the Contestable Works which would cover activities including design approval, inspection and monitoring. The CIC Charges shown in the Examples are for illustration only. For the avoidance of doubt, in each Example, where an ICP undertakes the Contestable Work, our Connection Charge will include the cost of the Non-Contestable Work and the CIC Charges but exclude the cost of Contestable Work.

The Examples are generic and standard for all LDNOs, but they do not represent the network analysis and subsequent design solutions that would be completed for an actual connection scheme. The actual designs are subject to our design polices.

**Key to Illustrations**

| | |
|---|---|
| X | Circuit Breaker (any voltage) |
| | Switch |
| | Transformer |
| | Joint on cable |
| | High voltage ring main unit |
| | Existing cable |
| | Proposed cable |
| | Normal Open Point (NOP) |
| G | Generator Customer |
| D | Demand Customer |
| | Point of Connection (POC) |
| SS | Sub Station |

**Example 1: A new connection to a domestic premise**

A Customer requests a LV single phase connection to a new house. The Premises can be connected to an existing LV main cable in the street.

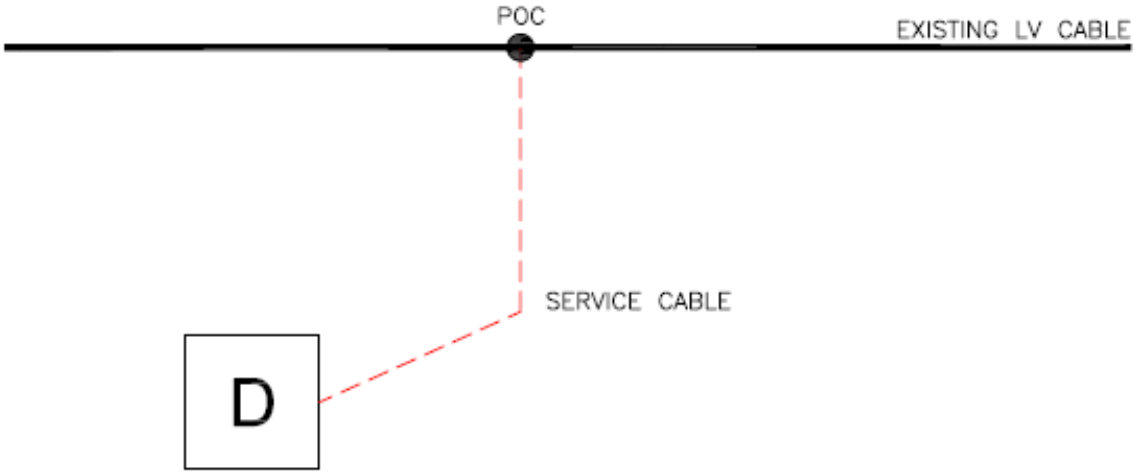


The Connection Charge for this Scheme is calculated as follows:

**Extension Assets:**

| | Cost | Apportionment | Customer Contribution |
|---|---|---|---|
| **Contestable Work** | | | |
| 15m service cable, excavation in footpath for joint hole to Customer laid duct, backfill and termination | £700 | n/a | £700 |
| **Non-Contestable Work** | | | |
| Single service breech joint | £400 | n/a | £400 |
| | | | |
| **Total Extension Asset Cost** | | | **£1,100** |
| **CIC Charges** | | | £100 |

**Total Connection Charge = £1,100**

**Example 2A: New connections on a domestic housing development**

A housing developer requests connections for 200 domestic Premises. The Required Capacity to supply the 200 homes is 250kVA. A new distribution substation will be established to provide the Required Capacity of the site. The Minimum Scheme requires the substation to be looped into the existing HV network.

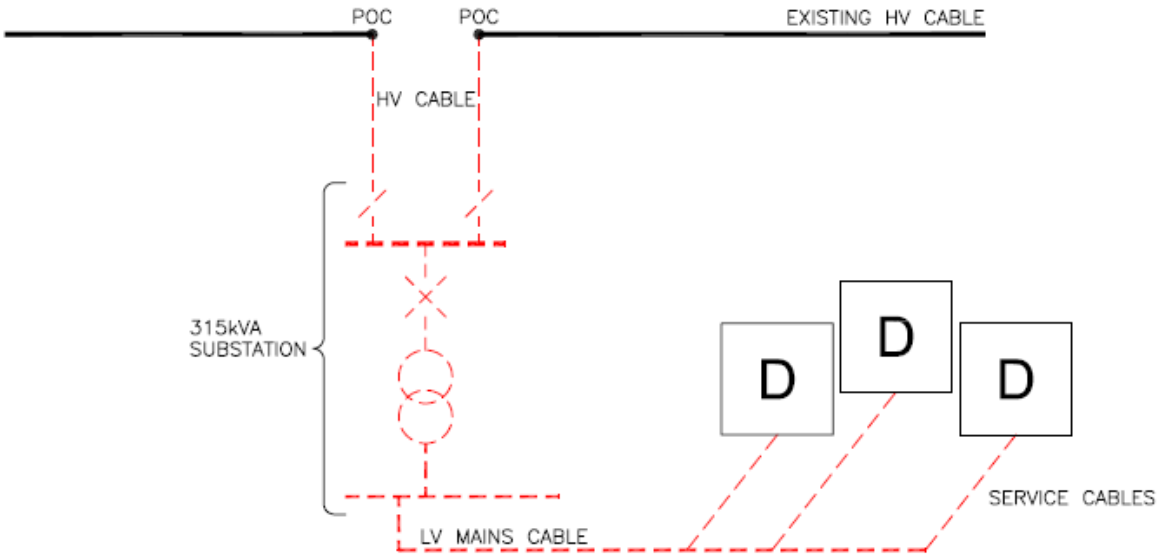


The Connection Charge for this Scheme is calculated as follows:

**Extension Assets:**

| | Cost | Apportionment | Customer Contribution |
|---|---|---|---|
| **Contestable Work** | | | |
| Provision and installation 100m HV cable | £11,000 | n/a | £11,000 |
| 315kVA substation | £24,000 | n/a | £24,000 |
| LV mains, service cables and terminations | £170,000 | n/a | £170,000 |
| **Non-Contestable Work** | | | |
| Two HV cable joints | £2,000 | n/a | £2,000 |
| | | | |
| **Total Extension Asset Cost** | | | **£207,000** |
| **CIC Charges** | | | £1,500 |

**Total Connection Charge = £207,000**

**Example 2B: New connections on a domestic housing development with interconnection.**

This Example demonstrates the application of two of the exceptions to the apportionment rules, Exception 1 (paragraph 5.17) and Exception 2 (paragraph 5.18).

As in Example 2A, a housing developer requests connections for 200 domestic Premises. The Required Capacity to supply the 200 homes is 250kVA. A new distribution substation will be established to provide the Required Capacity of the site. The Minimum Scheme requires the substation to be looped into the existing HV network. However, in this Example there is an option to provide an additional LV cable to interconnect the distribution substation with the existing LV network. This option is over and above the Minimum Scheme.

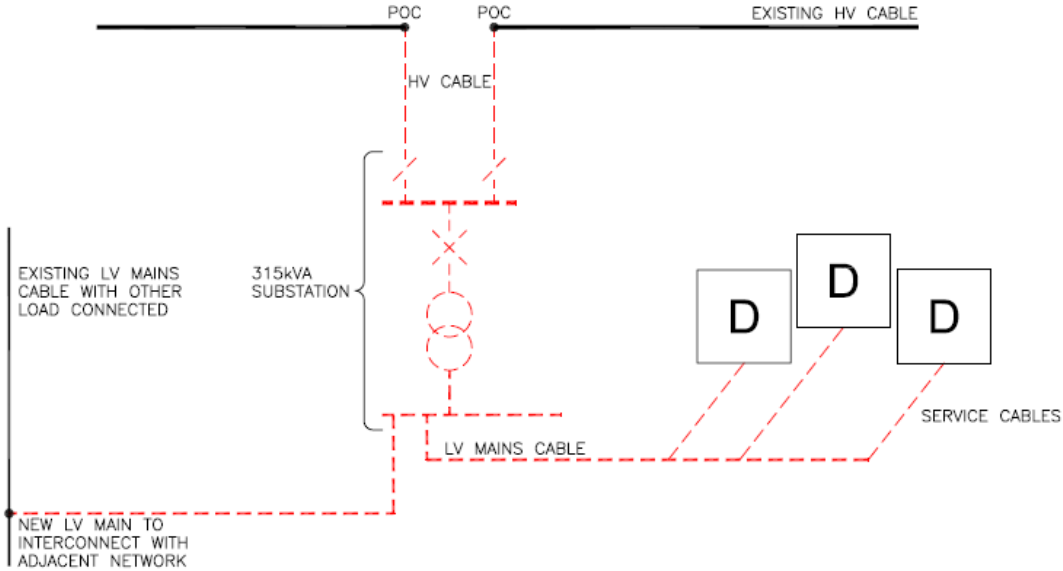


Interconnecting into the existing LV network will increase the capacity of the existing Distribution System. Therefore, the assets that connect the HV and LV network would normally be considered to be Reinforcement. These assets (as shown on the diagram above) include the HV cable, the 315kVA substation and the interconnecting LV main. They exclude the LV mains and service cables from the 315kVA substation to the Customer's development. However, whether these assets are to be considered Reinforcement or Extension Assets depends upon who requested the LV interconnection and whether any capacity created is likely to be used. One of three scenarios will apply –

<u>a) The LV interconnection is requested by the Customer (Exception 2).</u>

In this case the Reinforcement is over and above the Minimum Scheme and requested by the Customer. Therefore, Exception 2 applies and all assets (including the interconnecting LV cable) will be treated as Extension Assets and their costs will be borne in full by the Customer. As the interconnecting LV main and associated LV joint are over and above the Minimum Scheme, a charge for their future operation and maintenance will be made.

The Connection Charge for this Scheme is calculated as follows:

**Extension Assets:**

| | Cost | Apportionment | Customer Contribution |
|---|---|---|---|
| **Contestable Works** | | | |
| Provision and installation 100m 11kV cable (from existing HV network to substation) | £11,000 | n/a | £11,000 |
| 315kVA substation | £24,000 | n/a | £24,000 |
| LV mains, service cables and terminations (from substation to the Customer's development) | £170,000 | n/a | £170,000 |
| Interconnecting LV Cable (from substation to existing LV network) | £10,000 | n/a | £10,000 |
| **Non-Contestable Works** | | | |
| Two HV cable joints | £2,000 | n/a | £2,000 |
| LV cable joint | £1000 | n/a | £1,000 |
| Difference between Minimum and the actual Scheme is £11,000. Operation & Maintenance @20%* of £11,000 | | n/a | £2,200 |
| | | | |
| **Total Extension Asset Cost** | £218,000 | | **£220,200** |
| **CIC Charges** | | | £1,500 |

**Total Connection Charge = £220,200**

*Note, the 20% Operation and Maintenance figure is illustrative.

b) The LV interconnection is requested by us in order to create additional network capacity (No exception).

In this case, the assets connecting the existing HV and LV network add capacity to the existing network and none of the exceptions described in paragraphs 5.17-5.21 apply. Therefore they will be treated as Reinforcement. The costs of the Reinforcement assets that form part of the Minimum Scheme (the HV cable and associated HV joints; the 315kVA substation) will be apportioned. The interconnecting LV cable and associated LV joint are considered to be Reinforcement but, as they are over and above the Minimum Scheme and requested by us, the costs will be borne in full by us.

**Reinforcement:**

The RSN is that part or parts of the Distribution System that can be used to supply the Customer in both normal and abnormal running arrangements which, in this case, is the distribution substation and the HV Cables.

Security CAF calculation: the numerator in the CAF calculation is based upon the Required Capacity of the Customer, which is 250kVA. The denominator is based on the New Network Capacity following Reinforcement, which is 315kVA, i.e. the secure capacity of the distribution substation and HV cables.

The Connection Charge for this Scheme is calculated as follows:

**Reinforcement:**

| | Cost | Apportionment | Customer Contribution |
|---|---|---|---|
| **Non-Contestable Work** | | | |
| Provision and installation 100m 11kV cable (from existing HV network to substation) | £11,000 | 250/315 =79.4% | £8,730 |
| 315 kVA substation | £24,000 | as above | £19,048 |
| Two HV cable joints | £2,000 | as above | £1,587 |
| Interconnecting LV Cable (from substation to existing LV network) | £10,000 | In excess of Minimum Scheme | £0 |
| LV Cable Joint | £1,000 | In excess of Minimum Scheme | £0 |
| **Total Reinforcement Cost** | **£48,000** | | **£29,365** |

**Extension Assets:**

| | Cost | Apportionment | Customer Contribution |
|---|---|---|---|
| **Contestable Work** | | | |
| LV mains, service cables and terminations (from the substation to the Customer's development) | £170,000 | n/a | £170,000 |
| | | | |
| **Total Extension Asset Cost** | **£170,000** | | **£170,000** |
| **CIC Charges** | | | £1,500 |

**Total Connection Charge = £29,365 + £170,000 = £199,365**

c) The LV interconnection is requested by us but there is little prospect of the capacity created being used (Exception 1).

In this case all the requirements of Exception 1 (paragraph 5.17) are met so the assets that connect the existing HV and LV Distribution System will be treated as Extension Assets and their costs will not be apportioned. The Customer will pay the costs associated with the Minimum Scheme in full. The interconnecting LV cable and associated LV joint as they are over and above the Minimum Scheme and requested by us, therefore the costs will be borne in full by us.

The Connection Charge for this Scheme is calculated as follows:

**Extension Assets:**

| | Cost | Apportionment | Customer Contribution |
|---|---|---|---|
| **Contestable Works** | | | |
| Provision and installation 100m 11kV cable (from existing HV network to substation) | £11,000 | n/a | £11,000 |
| 315 kVA substation | £24,000 | n/a | £24,000 |
| LV mains, service cables and terminations (from substation to the Customer's development) | £170,000 | n/a | £170,000 |
| | | | |
| **Non-Contestable Works** | | | |
| Two HV cable joints | £2,000 | n/a | £2,000 |
| Interconnecting LV Cable (from substation to existing LV network) | £10,000 | In excess of Minimum Scheme | £0 |
| LV Cable Joint | £1000 | In excess of Minimum Scheme | £0 |
| | | | |
| **Total Extension Asset Cost** | **£218,000** | | **£207,000** |
| **CIC Charges** | | | £1,500 |

**Total Connection Charge = £207,000**

**Example 3: A new connection to a commercial Premises**

A Customer requests a new LV three phase 600kVA connection to commercial Premises. Four scenarios for connection are considered below. The Minimum Scheme will be dependent on the specific circumstances as set out in paragraphs 5.1 to 5.7.

a) Where the Minimum Scheme is a new 800kVA substation teed onto the existing HV network.

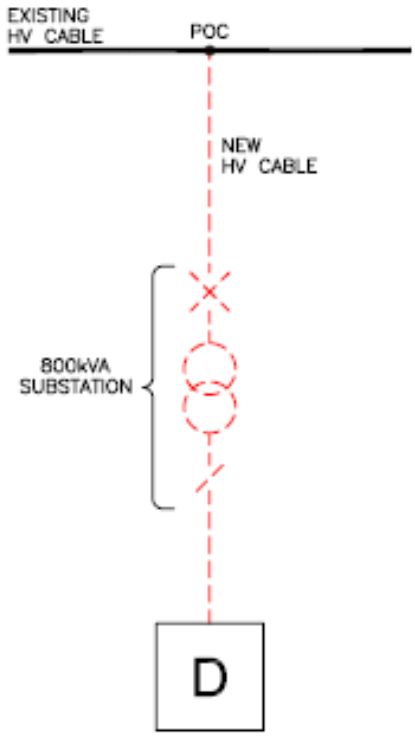


The Connection Charge for this Scheme is calculated as follows:

**Extension Assets:**

| | Cost | Apportionment | Customer Contribution |
|---|---|---|---|
| **Contestable Work** | | | |
| Provision and installation of 150m of HV cable | £30,000 | n/a | £30,000 |
| 800kVA substation | £17,000 | n/a | £17,000 |
| Provision and installation LV cabling | £4,400 | n/a | £4,400 |
| Metering panel | £800 | n/a | £800 |
| **Non-Contestable Work** | | | |
| HV joint to network | £1,900 | n/a | £1,900 |
| | | | |
| **Total Extension Asset Cost** | £54,100 | | **£54,100** |
| **CIC Charges** | | | £1,500 |

**Total Connection Charge = £54,100**

In each of the following scenarios the Customer is connected with a looped connection, as illustrated in the following diagram.

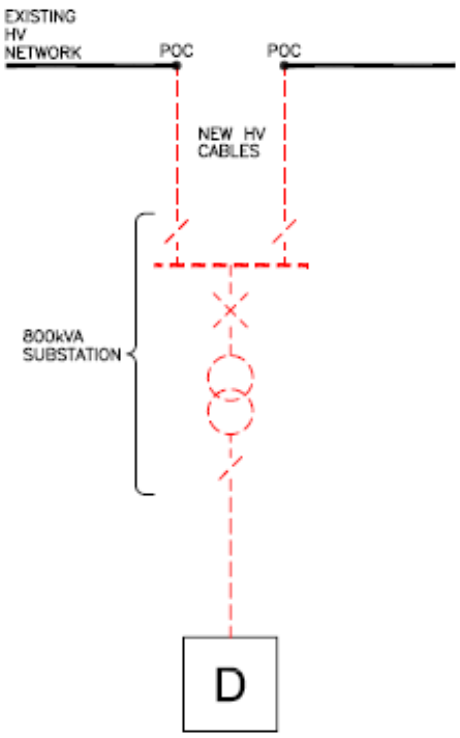


b) The Minimum Scheme is as for scenario a) above but the Customer requests an enhanced connection arrangement where the substation is looped into existing HV network.

The Connection Charge for this Scheme is calculated as follows:

**Extension Assets:**

| | Cost | Apportionment | Customer Contribution |
|---|---|---|---|
| **Contestable Work** | | | |
| Provision and installation of 300m of HV cable | £35,000 | n/a | £35,000 |
| 800kVA substation | £20,000 | n/a | £20,000 |
| Provision and installation LV cabling | £4,400 | n/a | £4,400 |
| Metering panel | £800 | n/a | £800 |
| **Non-Contestable Work** | | | |
| HV joints to network | £2,900 | n/a | £2,900 |
| | | | |
| Total Extension Asset Cost | £63,100 | | £63,100 |
| Difference between Minimum and the actual Scheme is £9,000. Operation & Maintenance @20%* of £9,000 | | | £1,800 |
| | | | |
| **Total Extension Asset Cost** | | | **£64,900** |
| **CIC Charges** | | | £1,500 |

**Total Connection Charge = £64,900**

*Note, the 20% Operation and Maintenance figure is illustrative.

c) The Minimum Scheme is as for scenario a) above but we request an Enhanced Scheme where the substation is looped into the existing HV network.

The Connection Charge for this Scheme is calculated as follows:

**Extension Assets:**

| | Cost | Apportionment | Customer Contribution |
|---|---|---|---|
| **Contestable Work** | | | |
| Provision and installation of 300m of HV cable | £35,000 | Minimum Scheme | £30,000 |
| 800kVA substation | £20,000 | Minimum Scheme | £17,000 |
| Provision and installation LV cabling | £4,400 | n/a | £4,400 |
| Metering panel | £800 | n/a | £800 |
| **Non-Contestable Work** | | | |
| HV joints to network | £2,900 | Minimum Scheme | £1,900 |
| | | | |
| **Total Extension Asset Cost** | **£63,100** | | **£54,100** |
| **CIC Charges** | | | £1,500 |

**Total Connection Charge = £54,100**

d) The Minimum Scheme is a new 800kVA substation looped into existing HV network.

The Connection Charge for this Scheme is calculated as follows:

**Extension Assets:**

| | Cost | Apportionment | Customer Contribution |
|---|---|---|---|
| **Contestable Work** | | | |
| Provision and installation of 300m of HV cable looped to network, HV Ring Main Unit, 800kVA transformer | £35,000 | n/a | £35,000 |
| 800kVA substation | £20,000 | n/a | £20,000 |
| Provision and installation LV cabling | £4,400 | n/a | £4,400 |
| Metering panel | £800 | n/a | £800 |
| **Non-Contestable Work** | | | |
| HV joints to network | £2,900 | n/a | £2,900 |
| | | | |
| **Total Extension Asset Cost** | **£63,100** | | **£63,100** |
| **CIC Charges** | | | £1,500 |

**Total Connection Charge = £63,100**

**Example 4: Additional load application for commercial Premises (requiring a new connection from the HV network)**

A Customer requests to increase the Maximum Capacity of their existing LV connection from 200kVA to 850kVA; an increase of 650kVA (the Required Capacity).

As the Customer's existing LV connection is unable to deliver the Required Capacity a new connection will be required from the local HV network. This will be a non-secure connection to a secure network. The Minimum Scheme is to overlay part of the nearest HV circuit (Feeder 2) which only has spare capacity of 200kVA. The Reinforcement to make the capacity available requires 1200m of existing HV cable to be overlaid with a larger capacity cable.

Following the Reinforcement the New Network Capacity will be 8000kVA. (i.e. after Reinforcement, in this particular case, the section of cable with the lowest rating in the ring represented by Feeder 1 and Feeder 2 is rated at 8000kVA).

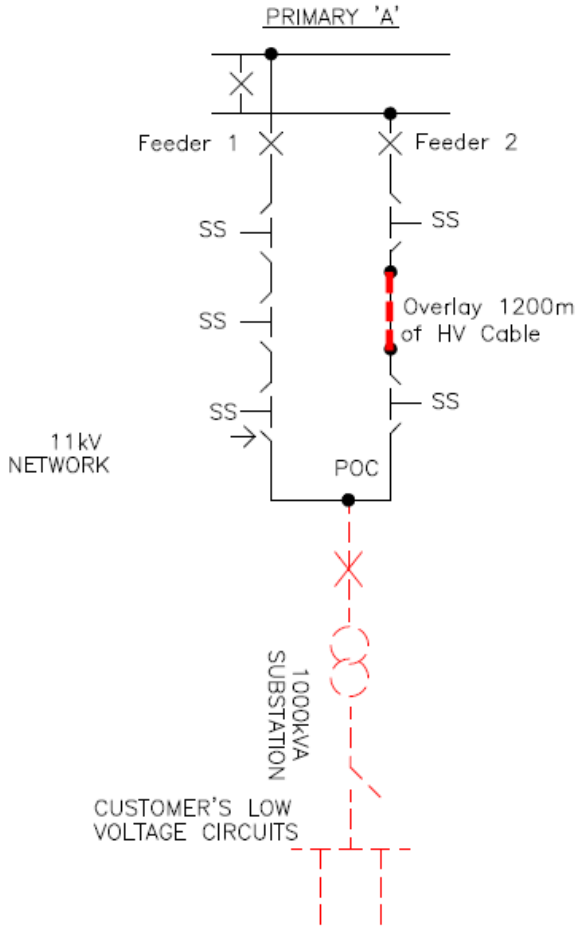


**Reinforcement:**

<u>The RSN is the two feeder ring comprising Feeder 1 and Feeder 2.</u>

Security CAF calculation: As this request is from an existing customer the numerator in the CAF calculation is based upon the increment of capacity requested, i.e. 650kVA (850kVA – 200kVA). The denominator is based upon the New Network Capacity following the Reinforcement.

Fault Level CAF calculation: This Scheme does not have any significant Fault Level contribution to the existing shared use distribution network and the Fault Level CAF is therefore not applicable here.

The Connection Charge for this Scheme is calculated as follows:

**Reinforcement:**

| | Cost | Apportionment | Customer Contribution |
|---|---|---|---|
| **Non Contestable Work** | | | |
| Overlay 1200m of HV cable | £120,000 | 650/ 8000 X 100% = 8.1% | £9,750 |
| HV Jointing | £4,800 | As above | £390 |
| | | | |
| **Total Reinforcement Cost** | £124,800 | | **£10,140** |

**Extension Assets:**

| | Cost | Apportionment | Customer Contribution |
|---|---|---|---|
| **Contestable Work** | | | |
| Provision and installation HV cable | £29,000 | n/a | £29,000 |
| 1000kVA substation | £20,000 | n/a | £20,000 |
| Termination of Customer's LV cables | £1,400 | n/a | £1,400 |
| LV Metering panel | £800 | n/a | £800 |
| **Non-Contestable Work** | | | |
| HV Jointing | £1,600 | n/a | £1,600 |
| | | | |
| **Total Extension Asset Cost** | £52,800 | | **£52,800** |
| **CIC Charges** | | | £1,100 |

**Total Connection Charge = £10,140 + £52,800 = £62,940**

**Example 5: Connection of a new embedded generator that requires Reinforcement involving Security and Fault Level CAFs.**

A Customer requests a connection to a generator with a Required Capacity for export purposes of 3MVA. The Fault Level contribution at the primary substation from the generation connection is 10MVA.

The POC is to the existing HV network at point B and it is proposed to install 500m of HV underground cable from the POC to the Customer's installation. This is a non-secure connection that requires reinforcement of a non-secure network.

The connection requires the Reinforcement of 500m of HV overhead line between points A and B for a thermal capacity requirement and replacement of the existing 11 panel HV switchboard at the primary substation in order to increase its fault level rating from 150MVA to 350MVA. However, the new fault level will be limited by the fault level rating of the local network of 250MVA.

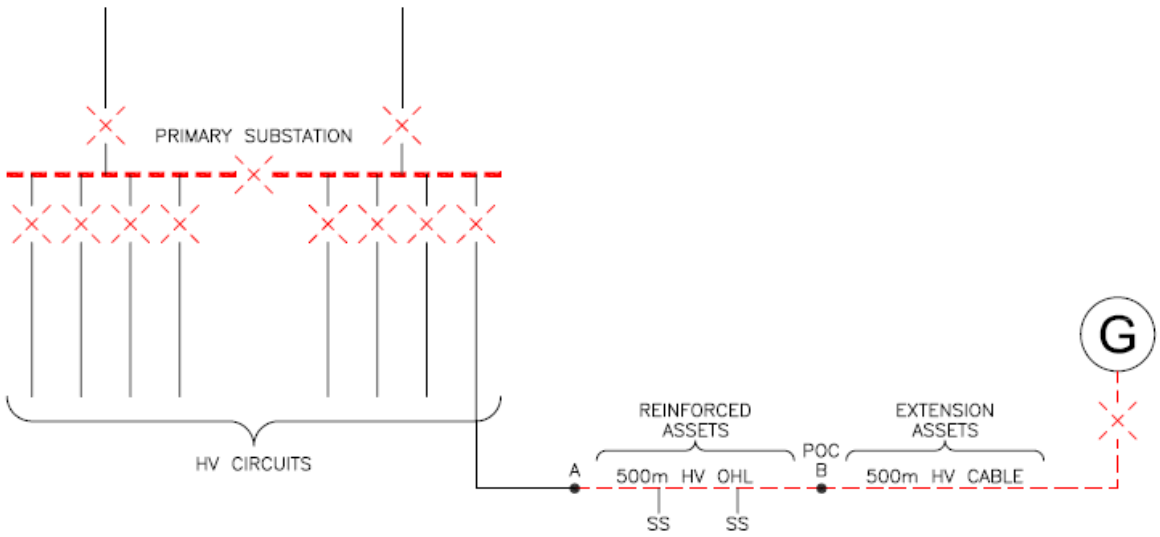


**Reinforcement:**

<u>The RSN is the HV network from the primary substation to Point B.</u>

Security CAF calculation: the numerator in the CAF calculation is based upon the Required Capacity of the Customer, i.e. 3MVA. The denominator is based on the New Network Capacity following Reinforcement, which is 7.6MVA, i.e. after Reinforcement, in this particular case, the section of cable with the lowest rating.

<u>The RSN is the 11kV switchboard at the primary substation</u>

Fault Level CAF calculation: The numerator in the CAF calculation is based upon the Fault Level contribution from the Customer's new generator connection, in this Example 10MVA. The denominator is based upon the New Fault Level Capacity, which is the lower of the Fault Level capacity of the new HV switchboard, 350MVA or of the local system, 250MVA in this Example.

The Connection Charge for this Scheme is calculated as follows:

**Reinforcement:**

| | Cost | Apportionment | Customer Contribution |
|---|---|---|---|
| **Non Contestable Work** | | | |
| Re-conductor of 500m of HV overhead line | £49,000 | 3/7.6 x 100% = 39.5% Security CAF | £19,342 |
| Replacement of existing 11 panel 11kV switchgear | £540,000 | 3x(10/250) x 100% = 12.0% Fault Level CAF | £64,800 |
| | | | |
| **Total Reinforcement Cost** | £589,000 | | **£84,142** |

**Extension Assets:**

| | Cost | Apportionment | Customer Contribution |
|---|---|---|---|
| **Contestable Work** | | | |
| Installation of 500m HV cable | £47,000 | n/a | £47,000 |
| HV circuit breaker at Customer's substation | £10,000 | n/a | £10,000 |
| **Non-Contestable Work** | | | |
| HV pole top termination | £1,400 | n/a | £1,400 |
| **Total Extension Asset Cost** | £58,400 | | **£58,400** |
| **CIC Charges** | | | £1,100 |

**Total Connection Charge = £84,142 + £58,400 = £142,542**

**Example 6: Connection of Mixed Housing and Commercial Development**

The Customer requests 18MVA for a new mixed housing & commercial development site which comprises of 7,000 plots and a mixture of small commercial Premises. The POC on the network will be at the two existing 33kV circuit breakers located at the 132/33kV substation approximately 600m from the site boundary. In order to accommodate the Required Capacity it will be necessary to reinforce the two 60MVA, 132/33kV, transformers with 90MVA transformers. It will then be necessary to extend the network and establish a 2 by 24MVA transformer 33/11kV substation on site with an extendable HV board in this new substation. The HV board will comprise of 2 incomer, 1 bus section and 8 outgoing circuit breakers. From this substation there will be 3km of HV cable required to supply 24 substations. From each of these 24 substations there will be associated LV cable and services as required.

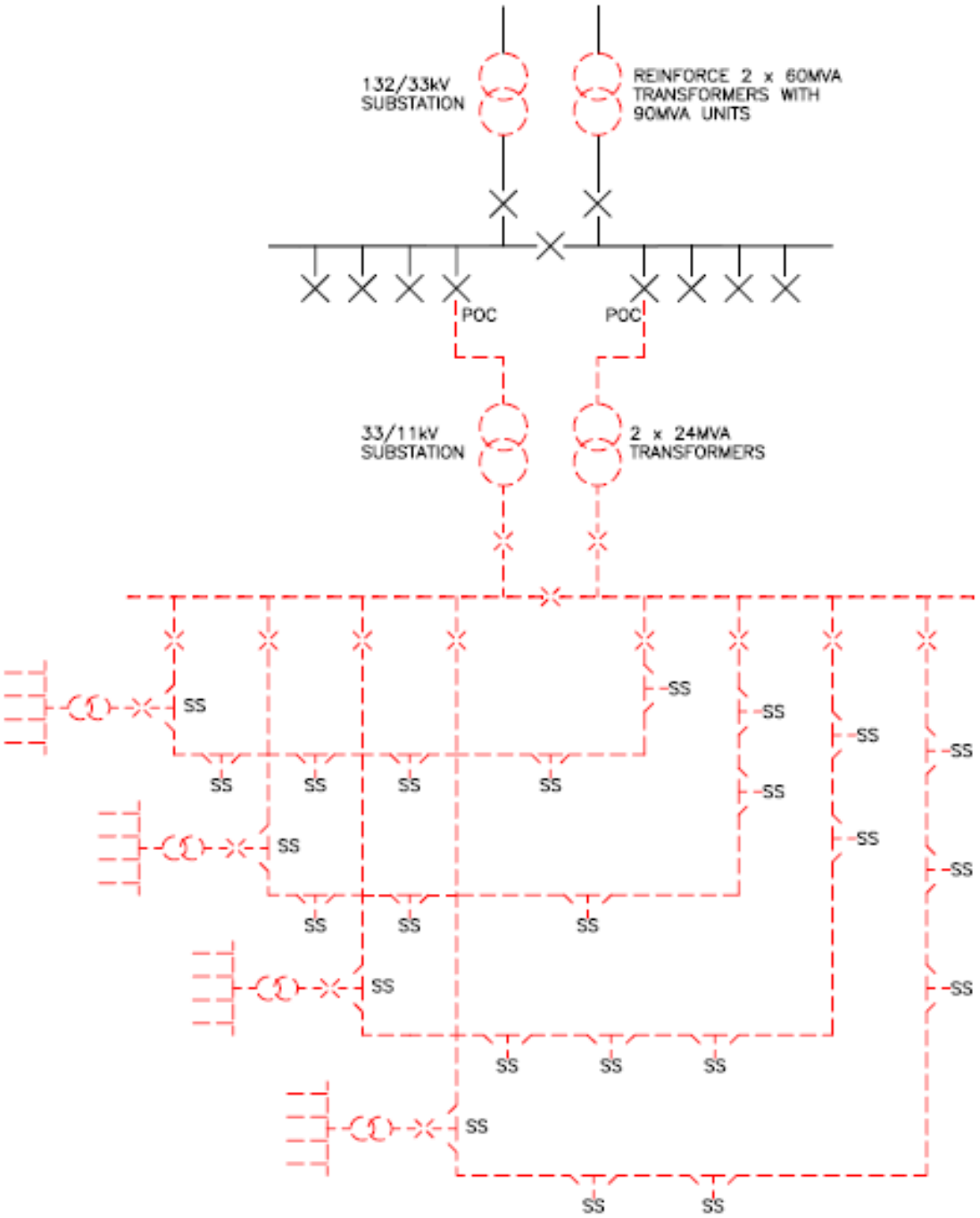


**Reinforcement:**

The RSN for the Reinforcement is the transformer at the existing 132/33kV substation

Security CAF calculation: the numerator in the CAF calculation is based upon the Required Capacity of the Customer, i.e. 18MVA. The denominator is based on the secure New Network Capacity following Reinforcement, i.e. 90MVA.

Fault Level CAF calculation: This Scheme does not have any significant Fault Level contribution to the existing shared use distribution network and Fault Level CAF is therefore not applicable here.

The Connection Charge for this Scheme is calculated as follows:

**Reinforcement:**

| | **Cost** | **Apportionment** | **Customer Contribution** |
|---|---|---|---|
| **Non Contestable Work** | | | |
| Replace two 60MVA, 132/33kV transformers with two 90MVA transformers. | £1,500,000 | 18/90 X 100% = 20.0% | £300,000 |
| | | | |
| **Total Reinforcement Cost** | | | **£300,000** |

**Extension Assets:**

| | **Cost** | **Apportionment** | **Customer Contribution** |
|---|---|---|---|
| **Contestable Work** | | | |
| 600m of 2 by 33kV cable | £180,000 | n/a | £180,000 |
| 3000m of HV circuits, 24 HV/LV substations, LV cable and services | £7,000,000 | n/a | £7,000,000 |
| 2 by 24MVA transformer substation | £2,000,000 | n/a | £2,000,000 |
| **Non-Contestable Work** | | | |
| Terminate two 33kV cables on to two existing 33kV circuit breakers. | £25,000 | n/a | £25,000 |
| **Total Extension Asset Cost** | £9,205,000 | | **£9,205,000** |
| **CIC Charges** | | | £15,000 |

**Total Connection Charge = £9,205,000 + £300,000 = £9,505,000**

**Example 7A: New 3MVA Generation Connection, Fault Level Triggered Reinforcement**

A Customer wishes to connect a new generator with a Required Capacity for export purposes of 3MVA.The connection of the generator requires the installation of 500m of 11kV cable and 1500m of overhead line between a new circuit breaker, added to the 11kV extensible switchgear panel at an existing primary substation and a new substation at the Customer's Premises. The 24MVA Fault Level contribution from the generator necessitates Reinforcement works to replace the 11kV switchgear at the existing primary substation with switchgear of a higher fault level rating.

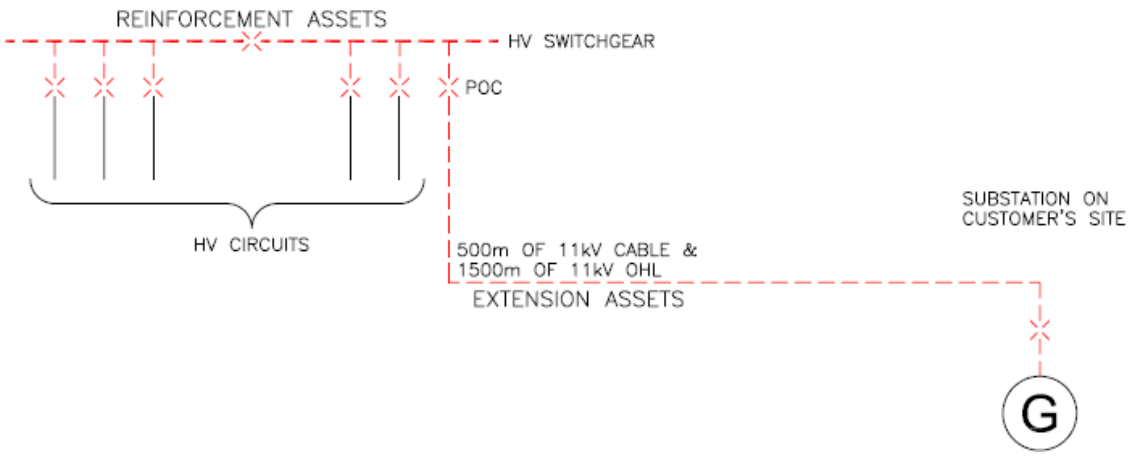


**Reinforcement:**

Fault Level CAF calculation: The numerator in the CAF calculation is based upon the Fault Level contribution from the Customer's new generator connection, in this Example 24MVA. The denominator is based upon the New Fault Level Capacity, in this Example the Fault Level capacity of the new 11kV switchboard, 315MVA.

The Connection Charge for this Scheme is calculated as follows:

**Reinforcement:**

| | **Cost** | **Apportionment** | **Customer Contribution** |
|---|---|---|---|
| **Non Contestable Work** | | | |
| Replacement HV switchboard (excluding Customer's sole use circuit breaker) | £450,000 | 3x(24/315) x 100% = 22.9% | £102,857 |
| | | | |
| **Total Reinforcement Cost** | £450,000 | | **£102,857** |

**Extension Assets:**

| | Cost | Apportionment | Customer Contribution |
|---|---|---|---|
| **Non-Contestable Work** | | | |
| HV circuit breaker at primary substation | £25,000 | n/a | £25,000 |
| **Contestable Work** | | | |
| Installation of a 500m HV cable | £40,000 | n/a | £40,000 |
| Installation of a 1500m HV overhead line | £35,000 | n/a | £35,000 |
| HV circuit breaker at Customer substation | £25,000 | n/a | £25,000 |
| | | | |
| **Total Extension Asset Cost** | £125,000 | | **£125,000** |
| **CIC Charges** | | | £1,100 |

**Total Connection Charge = £102,857 + £125,000 = £227,857**

**Example 7B: New 3MVA Generation Connection, Switchgear Extension Not Possible**

This example demonstrates the application of Exception 4 (paragraph 5.20).

A Customer requests to connect a new generator with a Required Capacity for export purposes of 3MVA. The connection of the generator requires the installation of the works as provided in Example 7A above. In this scenario, however, there is no Fault Level issue but, as the connection cannot be facilitated by an extension of the existing switchgear equipment in our primary substation, a full replacement of the existing switchgear installation is required. As no capacity is added to the existing shared use distribution network, the Customer will be required to fund the full cost of the switchgear installation replacement.

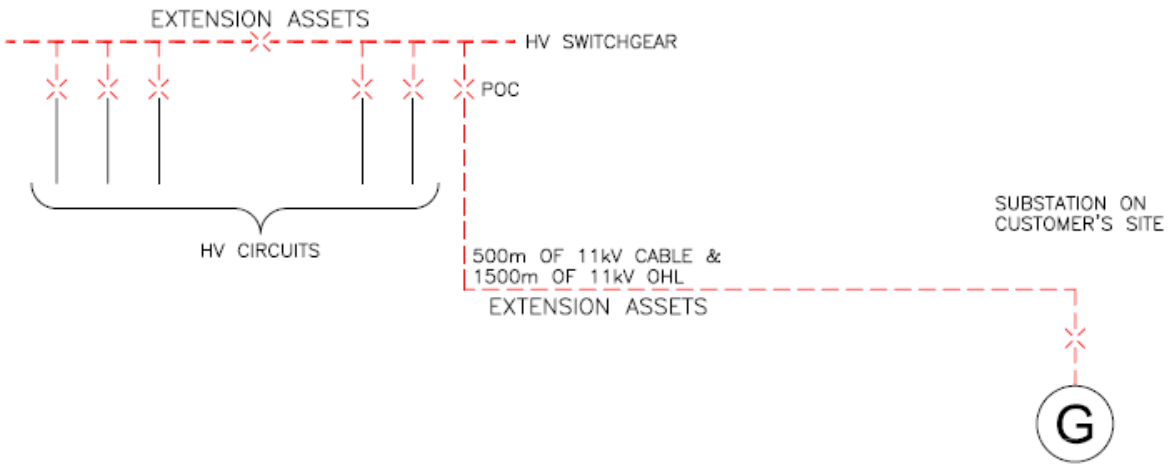


The existing switchgear had fault level rating of 250MVA. The company no longer uses switchgear with a fault level rating of 250MVA, so uses the closest equivalent switchgear used by it as standard, which has a slightly higher rating. Whilst the replacement switchgear increases the fault level capacity and could be considered Reinforcement, in this case this is due solely to the fault level rating of the standard equipment used by the company being higher than the fault level rating of the existing switchgear. The increase in fault level capacity is not required to connect the customer. Therefore, Exception 4 (Paragraph 5.20) applies and the switchgear will be considered to be Extension Assets and its costs will be charged in full to the customer.

The Connection Charge for this Scheme is calculated as follows:

**Extension Assets:**

| | Cost | Apportionment | Customer Contribution |
|---|---|---|---|
| **Contestable Work** | | | |
| Installation of a 500m HV cable | £40,000 | n/a | £40,000 |
| Installation of a 1500m HV overhead line | £35,000 | n/a | £35,000 |
| HV circuit breaker at Customer substation | £25,000 | n/a | £25,000 |
| **Non-Contestable Work** | | | |
| Replacement 11kV switchboard | 450,000 | n/a | 450,000 |
| New Extension Asset circuit breaker | £25,000 | n/a | £25,000 |
| | | | |
| **Total Extension Asset Cost** | £575,000 | | **£575,000** |
| **CIC Charges** | | | £1,100 |

**Total Connection Charge = £575,000**

**Example 8A: Connection of housing development with network Reinforcement**

A new housing development has a Required Capacity of 2MVA to serve 900 plots. The local 11kV feeder has a network capacity of 7.7MVA based upon the limitation of the existing 400 Amp circuit breakers at Primary Substation A. The existing load on the circuit is 7.6MVA. It is therefore not possible to connect the new load to this circuit without Reinforcement works. To reinforce the circuit it is proposed to install a new circuit breaker at Primary Substation B and install a new 11kV feeder (also rated at 7.7MVA) to the local 11kV circuit. The new 11kV feeder is used to split the existing circuit from a secure two to a secure three feeder network. The newly installed cable between point A and B is 1300m long. The newly installed cable to connect the development from the POC is 1200m.

This Reinforcement will allow a POC to be taken from the local 11kV circuit to supply the new development. Three 800kVA distribution substations are established onsite. The above work represents the Minimum Scheme to provide services to the new site.

The figure below shows the proposed Reinforcement and POC to the 11kV network:

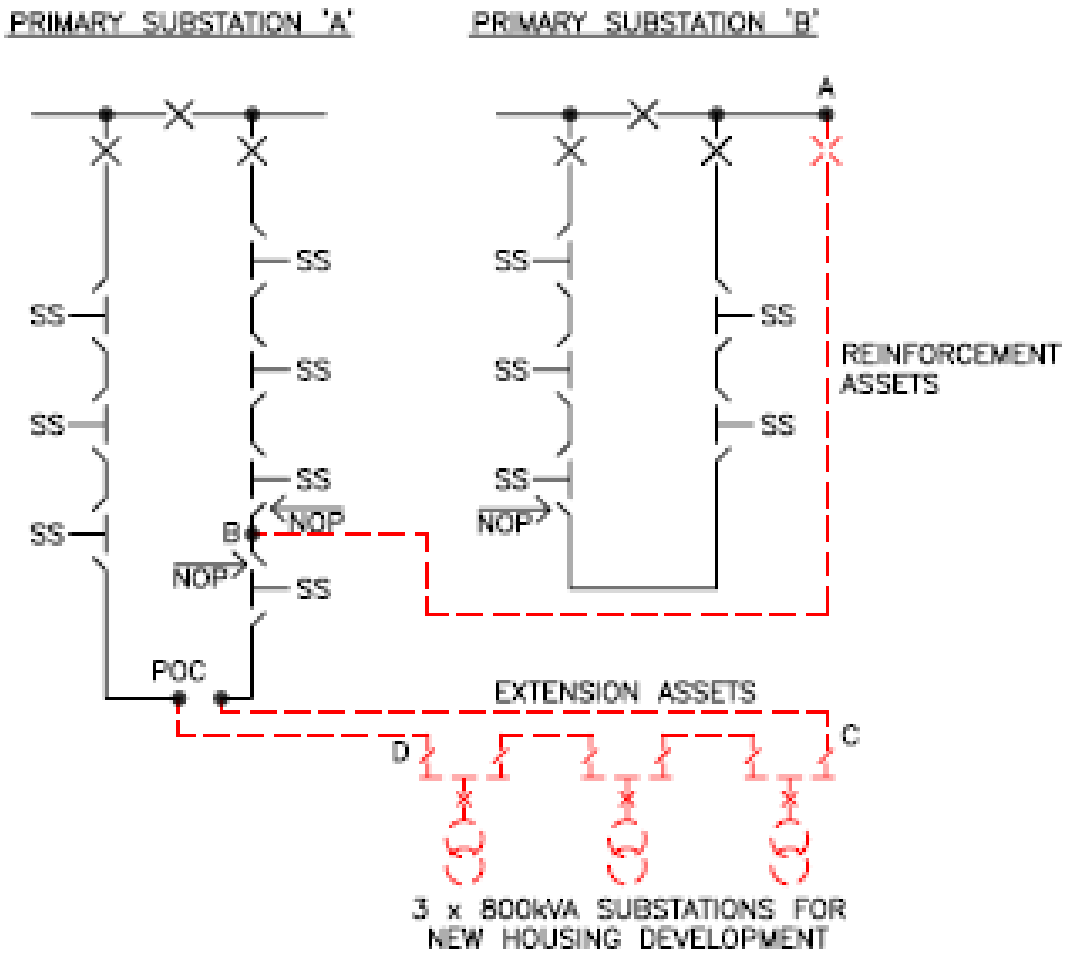

**Reinforcement:**

The RSN for the Reinforcement

For the Reinforcement CAF the RSN is considered to be the secure three feeder 11kV network comprising the two feeders from Primary Substation A and the new feeder from Primary Substation B as this new feeder is capable of feeding either of the existing circuits. The numerator in the CAF calculation is based upon the Required Capacity of the new development, i.e. 2MVA. In this case, the New Network Capacity (under secure N -1 conditions) following the Reinforcement works is equal to (3 – 1) x 7.7MVA = 15.4MVA

Fault Level CAF calculation: This Scheme does not have any significant Fault Level contribution to the existing shared use distribution network and Fault Level CAF is therefore not applicable here.

The Connection Charge for this Scheme is calculated as follows:

**Reinforcement:**

| | **Cost** | **Apportionment** | **Customer Contribution** |
|---|---|---|---|
| **Non Contestable Work** | | | |
| 1300m of 11kV Cable | £130,000 | 2/15.4 x 100% = 13.0% | £16,883 |
| 11kV Circuit Breaker at Primary Substation B | £45,000 | As above | £5,844 |
| 11kV jointing at Point B | £3,000 | As above | £390 |
| | | | |
| **Total Reinforcement Cost** | £178,000 | | **£23,117** |

**Extension Assets:**

| | **Cost** | **Apportionment** | **Customer Contribution** |
|---|---|---|---|
| **Contestable Work** | | | |
| 1200m of 11kV Cable | £120,000 | n/a | £120,000 |
| 3 by 800kVA distribution substations | £150,000 | n/a | £150,000 |
| On site LV mains and services | £330,000 | n/a | £330,000 |
| | | | |
| **Non-Contestable Work** | | | |
| 2 by 11kV closing joints | £5,000 | n/a | £5,000 |
| | | | |
| **Total Extension Asset Cost** | £605,000 | | **£605,000** |
| **CIC Charges** | | | £3,500 |

**Total Connection Charge = £23,117 + £605, 000 = £628,117**

**Example 8B: Connection of housing development**

This example demonstrates the application of Exception 5 (paragraph 5.21)

In this variation of the previous Example the site is closer to Primary Substation B and the Minimum Scheme is to connect the new load to the new 11kV feeder from Primary Substation B and provide interconnection to an existing secure 11kV feeder from Primary Substation A. In this Example 600m of 11kV cable on site (between Points C and D) is required to provide connectivity within the development and is considered to be Extension Assets.

The figure below shows the proposed network.

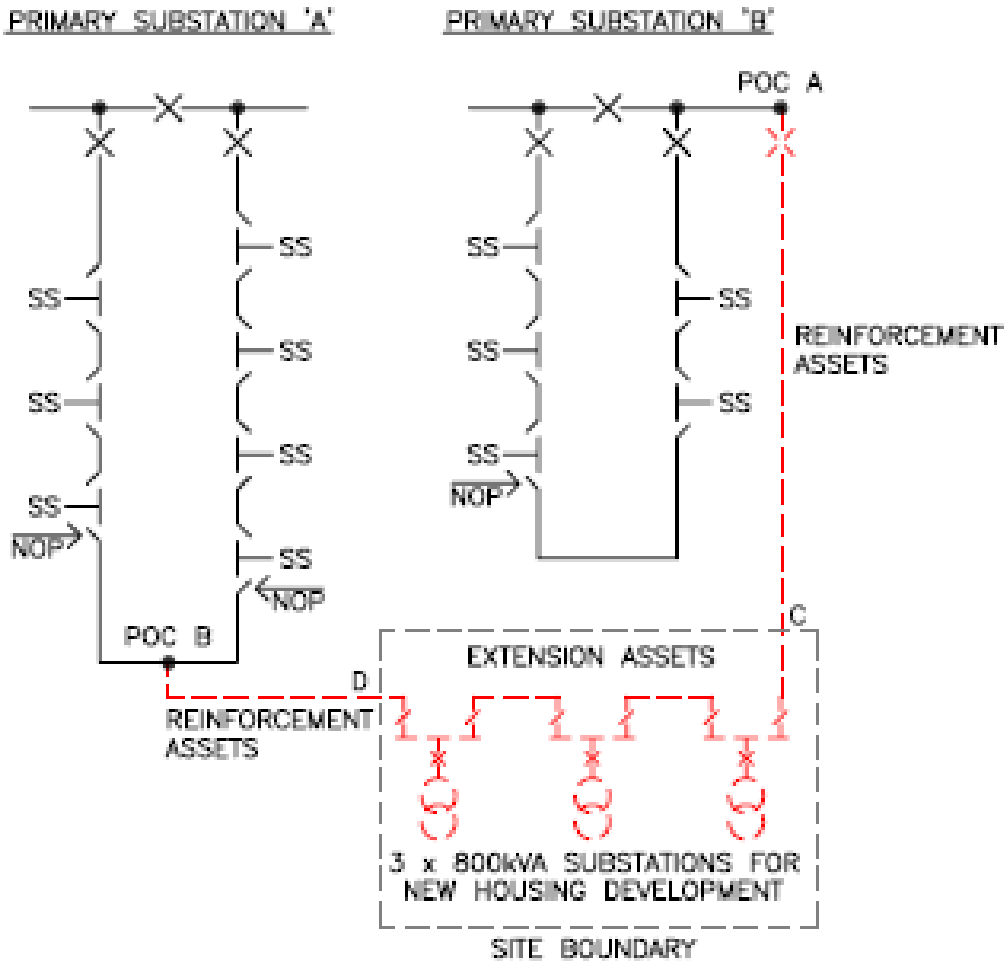


The assets connecting POC A and POC B add capacity to the existing network, so would normally be treated as Reinforcement. These comprise –

- the assets between the Customer's site and POC A (POC A to point C);
- the assets between the Customer's site and POC B (POC B to point D); and
- the 600m of 11kV cable on site.

The three 800kVA substations are not considered to provide connection between POC A and POC B. The 600m of 11kV cable on site is additional network length to provide connectivity between multiple exit points on the Customer's site. Therefore, Exception 5 applies and the 600m of 11kV cable on site will be treated as Extension Assets and its costs will charged in full to the customer. No exceptions apply to the assets between POC A and point C and POC B and point D. Therefore, these will be treated as Reinforcement and their costs will be apportioned.

**Reinforcement:**

The RSN for the Reinforcement

The RSN is considered to be the secure three feeder 11kV network comprising the two feeders from Primary Substation A and the new feeder from Primary Substation B. As in the above example the numerator in the CAF calculation is based upon the Required Capacity of the new development, i.e. 2MVA. In this case, however the work to provide the connection will increase the capacity of the existing shared use Distribution System from 7.7MVA to 15.4MVA. The New Network Capacity (under secure N -1 conditions) following the Reinforcement works is equal to (3 – 1) x 7.7MVA = 15.4MVA

Fault Level CAF calculation: This Scheme does not have any significant Fault Level contribution to the existing shared use Distribution System and Fault Level CAF is therefore not applicable here.

The Connection Charge for this Scheme is calculated as follows:

**Reinforcement:**

| | **Cost** | **Apportionment** | **Customer Contribution** |
|---|---|---|---|
| **Non Contestable Works** | | | |
| 1 new 11kV Circuit Breaker tailed out from primary substation A | £45,000 | 2/15.4 x 100% = 13.0% | £5,844 |
| 2 by 11kV closing joints | £5,000 | As above | £649 |
| 700m of 11kV cable from primary A to site | £70,000 | As above | £9,091 |
| 600m of 11kV cable from POC B to site | £60,000 | As above | £7,792 |
| | | | |
| **Total Reinforcement Cost** | £180,000 | | **£23,376** |

**Extension Assets:**

| | **Cost** | **Apportionment** | **Customer Contribution** |
|---|---|---|---|
| **Contestable Works** | | | |
| 600m of 11kV cable on site | £60,000 | n/a | £60,000 |
| 3 by 800KVA unit Substation | £150,000 | n/a | £150,000 |
| On site LV mains and services | £330,000 | n/a | £330,000 |
| | | | |
| **Non-Contestable Work** | | | |
| 2 by 11kV cable box terminations | £2,000 | n/a | £2,000 |
| | | | |
| **Total Extension Asset Cost** | £542,000 | | **£542,000** |
| **CIC Charges** | | | £3,500 |

**Total Connection Charge = £23,376 + £542, 000 = £565,376**

**Example 8C: Connection of housing development with remote network Reinforcement**

This further variation shows the arrangements that will apply where it is necessary to reinforce a different part of the Distribution System so that existing demand may be transferred in order to release capacity for the new connection.

A new housing development has a Required Capacity of 2MVA to serve 900 plots. The local 11kV feeder has a network capacity of 7.7MVA based upon the limitation of the existing 400 Amp circuit breakers at Primary Substation A. The existing load on the circuit is 7.6MVA. It is therefore not possible to connect the new load to this circuit without Reinforcement works.

It is proposed to reinforce an adjacent network so that two existing substations may be transferred on to it, in order to release capacity so that the new connections can be made. Primary Substation B has sufficient spare capacity to accommodate the two existing substations. A new circuit breaker is to be installed at Primary Substation B and a new 11kV feeder (also rated at 7.7MVA) is to be installed between points A – B and between points E – F for connection to the local 11kV circuit at point F. The existing circuit will be cut at point BE so that the new joints can be made. This will convert the Primary Substation B network from a two-feeder to a three-feeder network. The total new cable length between points A – B and points E - F is 500m. The network will be reconfigured by the installation of two short straps C – D and G - H in order to maintain connectivity.

This Reinforcement will allow a POC to be taken from the local 11kV circuit to supply the new development. The newly installed cable to connect the development from the POC is 1200m long. Three 800kVA distribution substations are to be established onsite. The above work represents the Minimum Scheme to provide connections to the new site.

**Original network:**

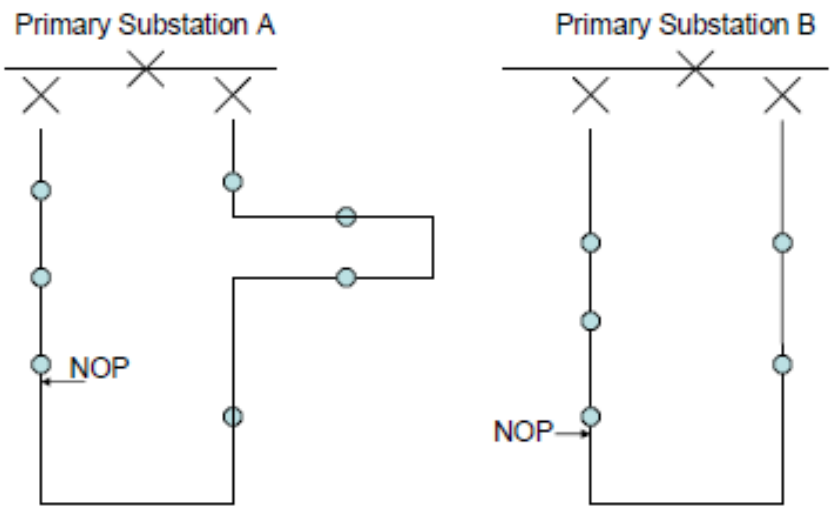

**Proposed network:**

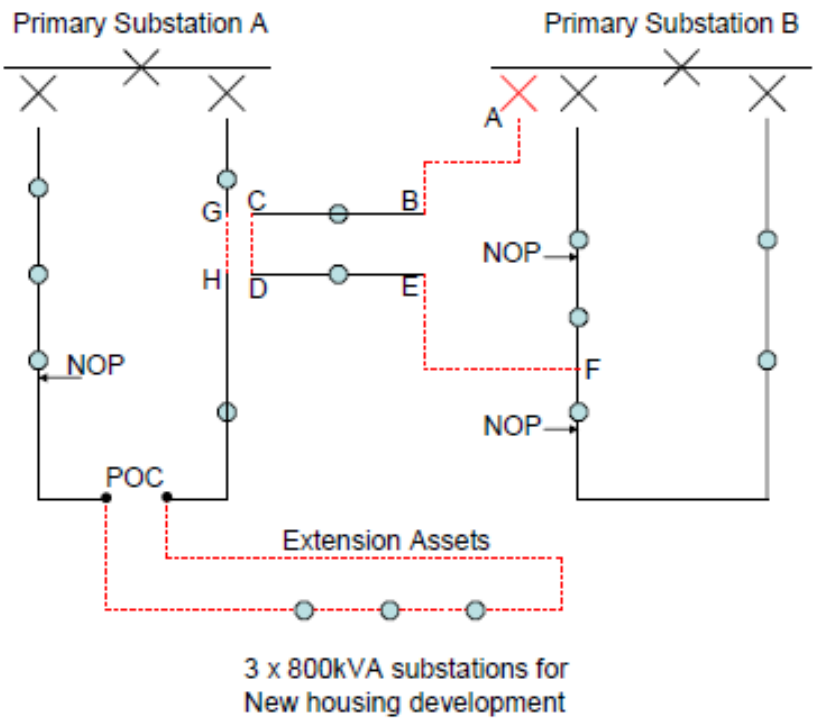


**Reinforcement:**

**The RSN for the Reinforcement**

For the Reinforcement CAF the RSN is the three-feeder network from Primary Substation B which supplies the loads on the existing two feeders from Primary Substation B as well as the loads at points C and D transferred from the network from the Primary Substation A. The Relevant Section of Network does not supply the new development in this case. The numerator in the CAF calculation is based upon the Required Capacity of the new development, i.e. 2MVA. In this case, the New Network Capacity (under N-1 conditions) following the Reinforcement works is equal to (3 – 1) x 7.7MVA = 15.4MVA.

Fault Level CAF calculation: This Scheme does not have any significant Fault Level contribution to the existing shared use distribution network and Fault Level CAF is therefore not applicable here.

The Connection Charge for this Scheme is calculated as follows:

**Reinforcement:**

| | **Cost** | **Apportionment** | **Customer Contribution** |
|---|---|---|---|
| **Non-Contestable Works** | | | |
| 500m of 11kV cable: A-B, C-D, E-F | £50,000 | 2/15.4 x 100% = 13% | £6,500 |
| 11kV circuit breaker at Primary Substation B | £45,000 | As above | £5,844 |
| 11kV jointing at Points A, B, C, D, E, F | £10,000 | As above | £1,300 |
| | | | |
| **Total Reinforcement Cost** | £105,000 | | **£13,644** |

**Extension Assets:**

| | Cost | Apportionment | Customer Contribution |
|---|---|---|---|
| **Contestable Work** | | | |
| 1,200m of 11kV cable inc. strap at G-H | £120,000 | n/a | £120,000 |
| 3 x 800kVA distribution substations | £150,000 | n/a | £150,000 |
| On site LV mains and services | £330,000 | n/a | £330,000 |
| | | | |
| **Non-Contestable Work** | | | |
| 4 x 11kV closing joints at POC and at points G,H | £10,000 | n/a | £10,000 |
| | | | |
| **Total Extension Asset Cost** | £610,000 | | **£610,000** |
| | | | |
| **CIC Charges** | | | £3,500 |

**Total Connection Charge = £13,644 + £610,000 = £623,644**

**Example 8D: Connection of housing development with load transfer**

An additional variation shows the arrangements that will apply where it is necessary to reconfigure the Distribution System so that existing demand may be transferred in order to release capacity for the new connection.

A new housing development has a Required Capacity of 2MVA to serve 900 plots. The local 11kV feeder has a network capacity of 7.7MVA based upon the limitation of the existing 400 Amp circuit breakers at Primary Substation A. The existing load on the circuit is 7.6MVA. It is therefore not possible to connect the new load to this circuit as presently configured.

It is proposed to reconfigure the Distribution System such that two existing substations may be transferred on to an adjacent network, in order to release capacity so that the new connections can be made. Primary Substation B has sufficient spare capacity to accommodate the two existing substations. New cables are to be installed between points A – B and between points E – F. The existing circuit will be cut at point BE so that the new joints can be made. The total new cable length between points A – B and points E - F is 100m. The network will be reconfigured by the installation of two short straps C – D and G - H in order to maintain connectivity.

This transfer of existing demand will allow a POC to be taken from the local 11kV circuit to supply the new development. The newly installed cable to connect the development from the POC is 1200m long. Three 800kVA distribution substations are to be established onsite. The above work represents the Minimum Scheme to provide connections to the new site.

**Original network:**

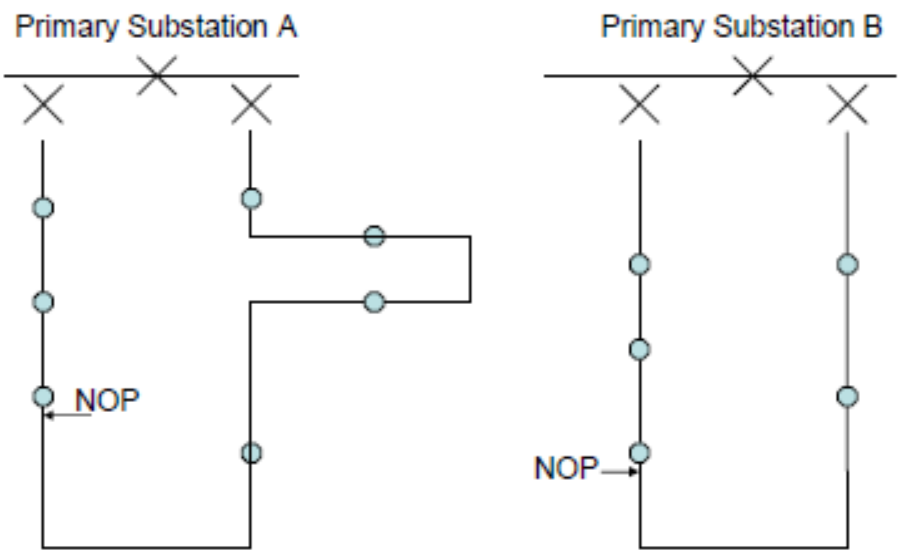

**Proposed network:**

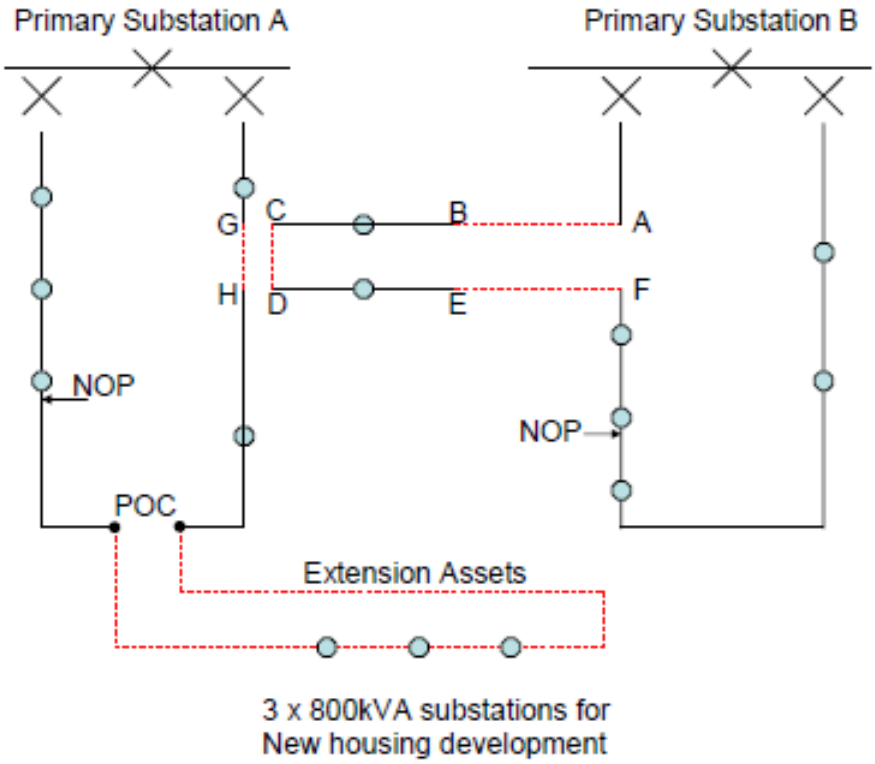


The Connection Charge for this Scheme is calculated as follows:

**Extension Assets:**

| | **Cost** | **Apportionment** | **Customer Contribution** |
|---|---|---|---|
| **Contestable Work** | | | |
| 1,300m of 11kV cable including A-B, C-D, E-F, G-H and from POC to the development | £120,000 | n/a | £120,000 |
| 3 x 800kVA distribution substations | £150,000 | n/a | £150,000 |
| On site LV mains and services | £330,000 | n/a | £330,000 |
| | | | |
| **Non-Contestable Work** | | | |
| 10 x 11kV closing joints at POC and at points A, B, C, D, E, F, G, H | £25,000 | n/a | £25,000 |
| | | | |
| **Total extension asset cost** | £625,000 | | **£625,000** |
| **CIC charges** | | | £3,500 |

**Example 9: Minimum Scheme**

A Customer requests a new 100kVA connection. There is sufficient spare capacity on the adjacent LV main but the existing 300kVA transformer at the local 11kV/LV substation is fully loaded.

a) The Minimum Scheme is to provide a new service cable and to replace the 300kVA transformer at the local substation with a 500kVA transformer.

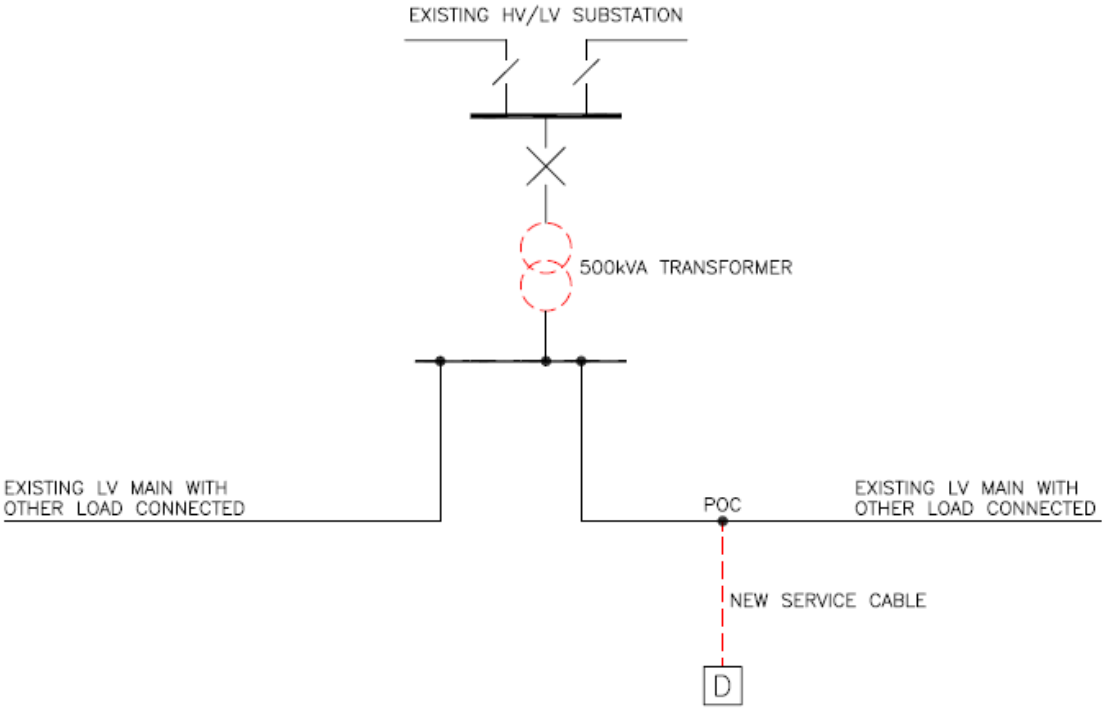


**Reinforcement:**

<u>The RSN for the Reinforcement is the HV/LV transformer</u>

Security CAF calculation: the numerator in the CAF calculation is based upon the Required Capacity of the Customer, i.e. 100kVA. The denominator is based on the New Network Capacity following Reinforcement, i.e. 500kVA.

Fault Level CAF calculation: This scheme does not have any significant Fault Level contribution to the existing shared use distribution network and Fault Level CAF is therefore not applicable here.

The Connection Charge for this Scheme is calculated as follows:

**Reinforcement:**

| | **Cost** | **Apportionment** | **Customer Contribution** |
|---|---|---|---|
| **Non Contestable Work** | | | |
| Replacement 500kVA transformer | £10,000 | 100/500 x 100% = 20.0% | £2,000 |
| | | | |

| | | | |
|---|---|---|---|
| **Total Reinforcement Cost** | £10,000 | | **£2,000** |

**Extension Assets:**

| | Cost | Apportionment | Customer Contribution |
|---|---|---|---|
| **Contestable Work** | | | |
| Provision and installation of LV service cable | £1,500 | n/a | £1,500 |
| | | | |
| **Non-Contestable Work** | | | |
| LV joints to network | £500 | n/a | £500 |
| | | | |
| **Total Extension Asset Cost** | £2,000 | | **£2,000** |
| **CIC Charges** | | | £200 |

**Total Connection Charge = £2,000 + £2,000 = £4,000**

b) However the DNO wishes to carry out an Enhanced Scheme to install a 1000kVA transformer at the local substation and install a new LV main that will connect to and pick up load from an adjacent LV network.

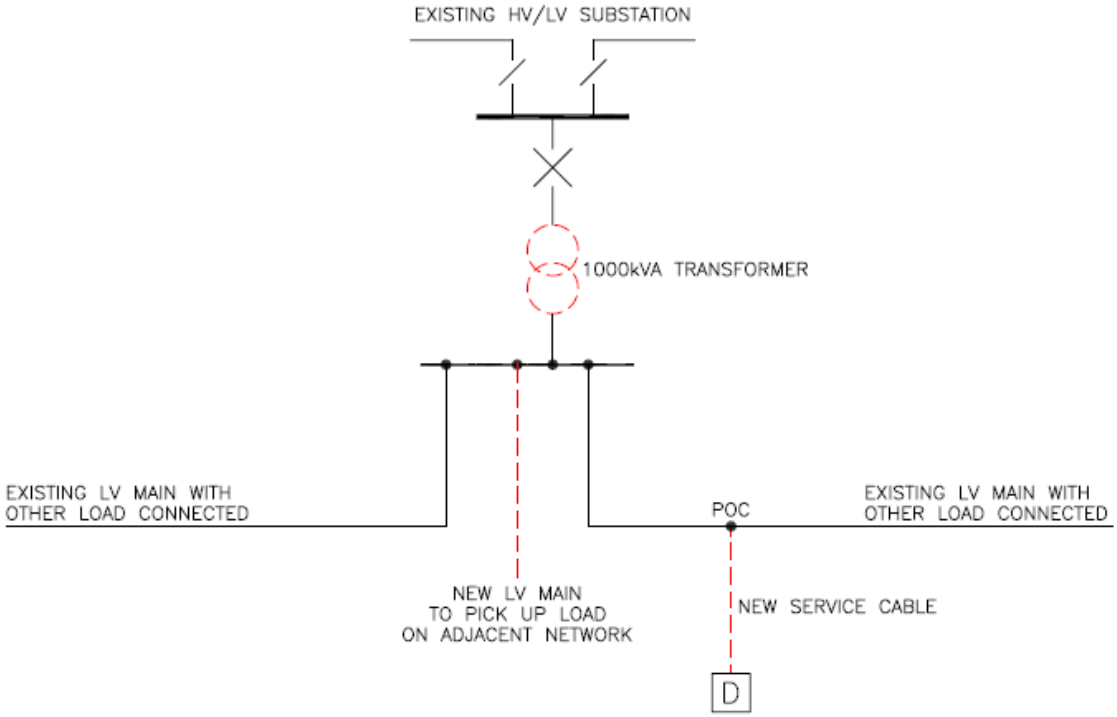


<u>The RSN for the Reinforcement is the HV/LV transformer</u>

Security CAF calculation: the numerator in the CAF calculation is based upon the Required Capacity of the Customer, i.e. 100kVA. The denominator is based on the New Network Capacity following Reinforcement, i.e. 1000kVA.

Fault Level CAF calculation: This scheme does not have any significant Fault Level contribution to the existing shared use distribution network and Fault Level CAF is therefore not applicable here.

**Reinforcement:**

| | Cost | Apportionment | Customer Contribution |
|---|---|---|---|
| **Non Contestable Work** | | | |
| Replacement 1000kVA transformer | £15,000 | 100/1000 x 100% = 10.0% | £1,500 |
| | | | |
| **Total Reinforcement Cost** | £15,000 | | **£1,500** |

**Extension Assets:**

| | Cost | Apportionment | Customer Contribution |
|---|---|---|---|
| **Contestable Work** | | | |
| Provision and installation of LV service cable | £1,500 | n/a | £1,500 |
| | | | |
| **Non-Contestable Work** | | | |
| LV joints to network | £500 | n/a | £500 |
| | | | |
| **Total Extension Asset Cost** | £2,000 | | **£2,000** |
| **CIC Charges** | | | £200 |

**Total Connection Charge = £1,500 + £2,000 = £3,500**

**The cost of the new LV mains will be met by us and does not form part of the Connection Charge.**

In this instance the Connection Charge resulting from the Enhanced Scheme is lower than that resulting from the Minimum Scheme and the Customer would benefit from the lower Connection Charge and pay £3,500 (paragraph 5.5 refers).

c) If, however under the proposed DNO Scheme the transformer cost was £25,000 then the resultant Connection Charge would be considered as follows:

**Reinforcement:**

| | Cost | Apportionment | Customer Contribution |
|---|---|---|---|
| **Non Contestable Work** | | | |
| Replacement 1000kVA transformer | £25,000 | 100/1000 x 100% = 10.0% | £2,500 |
| | | | |
| **Total Reinforcement Cost** | £25,000 | | **£2,500** |

**Extension Assets:**

| | Cost | Apportionment | Customer Contribution |
|---|---|---|---|
| **Contestable Work** | | | |
| Provision and installation of LV service cable | £1,500 | n/a | £1,500 |
| | | | |
| **Non-Contestable Work** | | | |
| LV joints to network | £500 | n/a | £500 |
| | | | |
| **Total Extension Asset Cost** | £2,000 | | **£2,000** |
| **CIC Charges** | | | £200 |

**Total Connection Charge = £2,500 + £2,000 = £4,500 but in this instance the Customer contribution will be capped at the contribution that would have been due under the Minimum Scheme, i.e. £4,000 (paragraph 5.5 refers).**

**Example 10: A new connection application for commercial Premises on a meshed 11kV distribution system requiring Reinforcement.**

A Customer requests a new connection to a commercial premise requiring a 4MVA HV metered connection. The local 11kV network is of a meshed design whereby the 11kV network is supplied from single 33/11kV primary transformers via 33kV radial feeds as shown below.

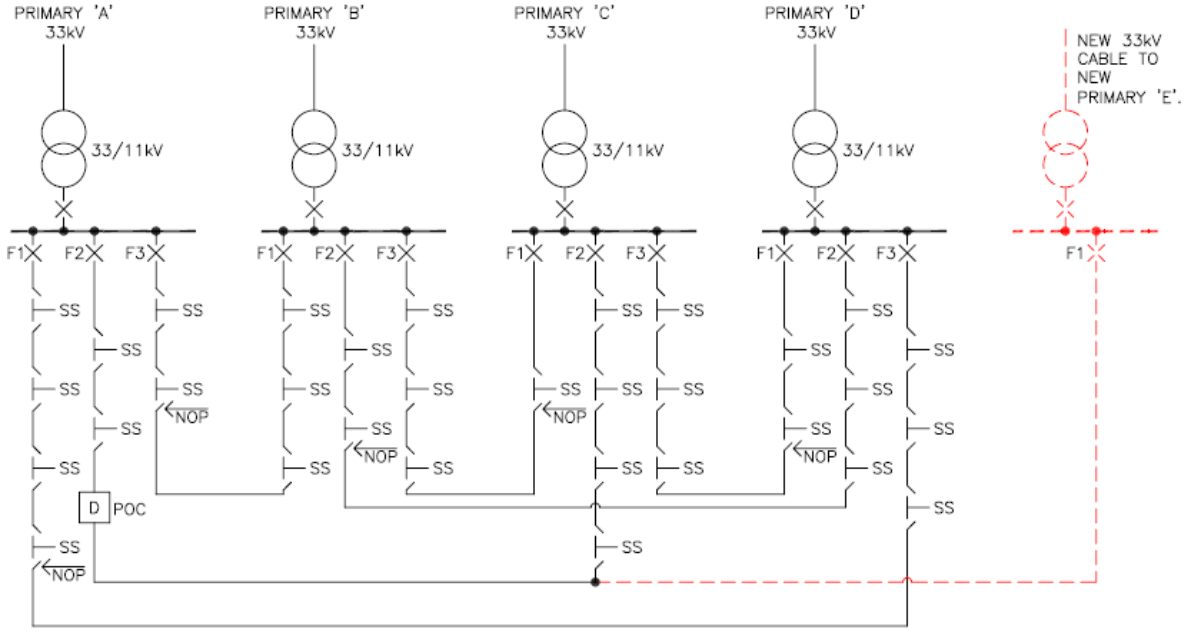


The existing network consists of four 10MVA primary transformer substations and associated 11kV switchgear. A new connection of 4MVA has been requested in the vicinity of F2 from Primary A.

The existing relevant primary transformer group is loaded to its secure capacity so the primary transformer group will require Reinforcement to enable the new connection to progress.

To provide the Required Capacity, the 11kV network will be reinforced by the installation of a new primary substation connected to the nearest 33kV circuit. The new primary substation (Primary E) will contain a 10MVA transformer, associated 11kV switchgear and a new 11kV (7.7 MVA) cable installed to interconnect into the existing 11kV network (from F2 at Primary A to F2 at Primary C).

**Reinforcement:**

Security CAF calculation: In this example there are two different security CAFs applied. This is because the RSN is different when considering the new network capacity in respect of different elements of the Reinforcement works.

<u>The RSN for the Reinforcement comprising the 11kV Cable Works:</u>

For the 11kV cable assets the RSN is considered to be the secure three feeder 11kV network from Primary A (Feeder 2), Primary C (Feeder 2) and Primary E (Feeder 1). In this case the New Network Capacity (under secure N -1 conditions) following the Reinforcement works is equal to

(3 – 1) x 7.7MVA = 15.4MVA

This is due to the fact that following the Reinforcement work both of the existing circuits; Primary A, Feeder 2 and Primary C, Feeder 2 can be loaded to their full capacity and will have the

newly installed clean feeder from Primary E to act as a back feed to meet the requirements of P2/6.

The security CAF for these assets will therefore be 4/15.4 X 100% = 26.0%

<u>The RSN for the Reinforcement comprising the Primary substation assets:</u>

In this instance the RSN comprises Primary A, C and E within the group that can be used to supply the customer. The New Network Capacity of this RSN (under secure N -1 conditions) following the Reinforcement works is equal to 17.7MVA. (10MVA from either Primary A or Primary C and 7.7MVA from Primary E which is limited by the single 11kV cable connected to it.

The security CAF for these assets will therefore be 4/17.7 X 100% = 22.6%

Fault Level CAF calculation: This Scheme does not have any significant Fault Level contribution to the existing shared use distribution network and Fault Level CAF is therefore not applicable here.

The Connection Charge for this Scheme is calculated as follows:

**Reinforcement:**

| | **Cost** | **Apportionment** | **Customer Contribution** |
|---|---|---|---|
| **Non Contestable Works** | | | |
| 500m 11kV cable from new primary substation E | £50,000 | 4/15.4 X 100% = 26.0% | £12,987 |
| 1 by 11kV closing joints | £4,000 | As above | £1,039 |
| 11kV switchgear at new Primary E | £80,000 | 4/17.7 X 100% = 22.6% | £18,079 |
| Primary transformer | £600,000 | As above | £135,593 |
| 2.5km of 33kV cable installation | £500,000 | As above | £112,994 |
| 33kV Circuit Breaker | £70,000 | As above | £15,819 |
| 33kV Terminations | £10,000 | As above | £2,260 |
| | | | |
| **Total Reinforcement Cost** | £1,314,000 | | **£298,771** |

**Extension Assets:**

| | Cost | Apportionment | Customer Contribution |
|---|---|---|---|
| **Contestable Work** | | | |
| HV ring main unit | £20,000 | n/a | £20,000 |
| HV metering unit | £10,000 | n/a | £10,000 |
| 500m of 11kV cable | £100,000 | n/a | £100,000 |
| | | | |
| **Non-Contestable Work** | | | |
| 2 by 11kV closing joints | £5,000 | n/a | £5,000 |
| | | | |
| **Total Extension Asset Cost** | £135,000 | | **£135,000** |
| | | | |
| **CIC Charges** | | | £3,500 |

**Total Customer Contribution = £298,771 + £135,000 = £433,771**

**Example 11: Non-Secure Connection with Non-Secure Reinforcement**

A Customer wishes to connect a new generator with a Required Capacity for export purposes of 5 MVA. The connection of the generator requires the installation of 1,000m of 33kV cable and a 33kV metering circuit breaker, these being Extension Assets. An existing spare circuit breaker at the substation is utilised which, in this case, is not chargeable to the Customer.

As there is insufficient capacity in the existing 24.0 MVA thermal capacity rated 33kV feeder for the new generation due to the presence of existing generation, the connection also requires the installation of a new 33kV feeder, which also has a thermal capacity of 24.0 MVA, as Reinforcement. This is the Minimum Scheme as it is cheaper to do this, to the extent as shown in the diagram below, rather than upgrade the existing 33kV feeder to the same point along it.

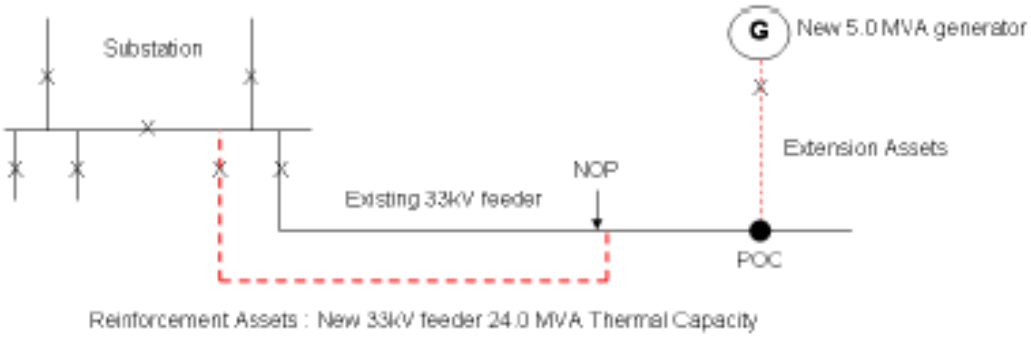


**Reinforcement:**

The numerator in the CAF calculation is the Required Capacity of the new generator, which is 5.0 MVA.

The Relevant Section of Network in this case is the existing 33kV feeder and the new 33kV feeder. The New Network Capacity is calculated using the non-secure capacity and is therefore the sum of the thermal capacities of the two feeders, which is 48.0 MVA. This is the denominator in the CAF calculation.

The Connection Charge for this Scheme is calculated as follows:

**Reinforcement:**

| | **Cost** | **Apportionment** | **Customer Contribution** |
|---|---|---|---|
| **Contestable Works** | | | |
| Installation of new 33kV feeder | £500,000 | 5.0/48.0 x 100% = 10.4% | £52,000 |
| | | | |
| **Total Reinforcement Cost** | £500,000 | | **£52,000** |

**Extension Assets:**

| | Cost | Apportionment | Customer Contribution |
|---|---|---|---|
| **Contestable Work** | | | |
| Installation of 1,000m 33kV cable | £200,000 | n/a | £200,000 |
| Installation of 33kV metering circuit breaker | £70,000 | n/a | £70,000 |
| | | | |
| **Non-Contestable Work** | | | |
| Joints to 33kV network | £10,000 | n/a | £10,000 |
| | | | |
| **Total Extension Asset Cost** | £280,000 | | **£280,000** |
| | | | |
| **CIC Charges** | | | £3,500 |

**Total Connection Charge = £52,000 + £280,000 = £332,000**

**Example 12: Non-Secure Connection with Secure Reinforcement**

A Customer requests a new connection to industrial premises requiring an 8 MVA metered demand connection. In this case, the Customer has exercised their option to request non-secure Extension Assets in the provision of the connection.

The existing network comprises a substation which has 2 x 15 MVA transformers. The Minimum Scheme to provide the connection is to install 750m of 11 kV cable from the substation to the industrial premises, as Extension Assets. As there is insufficient capacity available from the existing 2 x 15 MVA transformers to provide the new connection, it will be necessary to upgrade the transformers to 2 x 24 MVA units. Both transformers at the substation must be upgraded to ensure the 11kV network load can be maintained during planned or unplanned outages of one of the transformers. Although the Customer wishes to accept a non-secure connection, the substation must provide secure capacity to its Group Demand (which includes the Customer) to comply with the requirements of Engineering Recommendation P2/6. As the Extension Assets will be provided solely for the Customer, these can be provided on the basis of a single circuit to provide a non-secure connection, at the Customer's request.

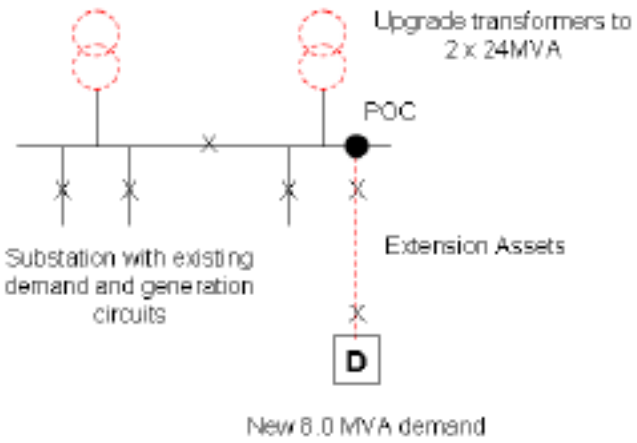


**Reinforcement:**

The numerator in the CAF calculation is the Required Capacity of the new demand, which is 8.0 MVA.

The Relevant Section of Network in this case is the transformers at the substation. The New Network Capacity is the secure capacity of the transformers, which is 24 MVA. This is the denominator in the CAF calculation.

The Connection Charge for this Scheme is calculated as follows:

**Reinforcement:**

| | **Cost** | **Apportionment** | **Customer Contribution** |
|---|---|---|---|
| **Non-Contestable Work** | | | |
| Installation of 2 x 24 MVA 33/11kV transformers | £1,500,000 | 8.0/24.0 x 100% = 33.3% | £500,000 |
| | | | |
| **Total Reinforcement Cost** | £1,500,000 | | **£500,000** |

**Extension Assets:**

| | Cost | Apportionment | Customer Contribution |
|---|---|---|---|
| **Contestable Work** | | | |
| Installation of 750m 11kV cable | £75,000 | n/a | £75,000 |
| Installation of 11kV metering circuit breaker | £50,000 | n/a | £50,000 |
| | | | |
| **Non-Contestable Work** | | | |
| Joints to 11kV network | £5,000 | n/a | £5,000 |
| | | | |
| **Total Extension Asset Cost** | £130,000 | | **£130,000** |
| | | | |
| **CIC Charges** | | | £1,100 |

**Total Connection Charge = £ 500,000 + £ 130,000 = £ 630,000**

**Example 13: Secure Connection With Secure Reinforcement**

A Customer requests a new connection to commercial premises which has a Required Capacity of 2.5 MVA. The connection is to be provided on a secure basis and the Minimum Scheme is as shown.

On the existing network, only Feeder B1 has sufficient thermal capacity available to accommodate the additional demand. To comply with demand security requirements, it is necessary to install a new feeder (Feeder A1) with a thermal capacity of 7 MVA, as a Reinforcement of the network.

The Extension Assets in this case are two 11 kV cable circuits of 25m each.

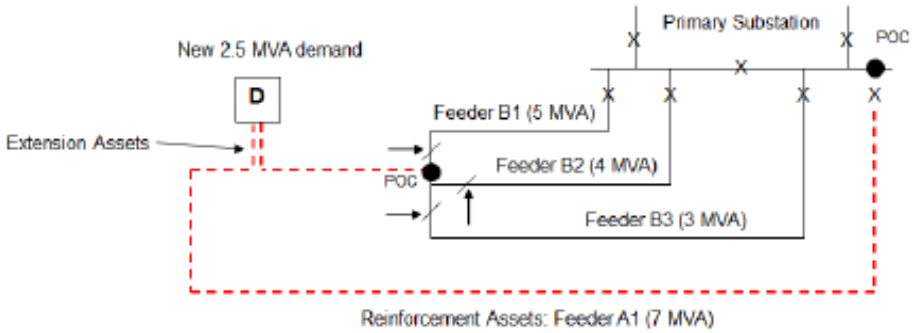


**Reinforcement:**

If sufficient capacity had been available in the existing network, only two of the existing feeders would have been required to provide the required security. To determine which two feeders are relevant, the feeders with the closest ratings to the new feeder are considered.

In this case, Feeders B1 (5 MVA) and B2 (4 MVA) have the closest ratings to the new Feeder A1 (7 MVA). Therefore, the Relevant Section of Network is (B1 and B2) and A1. Note that the RSN will at most be limited to a three-feeder ring.

The New Network Capacity is determined by applying (N – 1) security to the three-feeder RSN. This gives a secure NNC of (5 MVA + 4 MVA) = 9 MVA. This recognises the possible loss of feeder A1 and supply through Feeder B1.

Therefore, the numerator in the CAF calculation is the Required Capacity of 2.5 MVA and the denominator is the New Network Capacity of 9.0 MVA.

The Connection Charge for this Scheme is calculated as follows:

**Reinforcement:**

| | **Cost** | **Apportionment** | **Customer Contribution** |
|---|---|---|---|
| **Contestable Works** | | | |
| Installation of new 11kV feeder | £250,000 | 2.5/9.0 x 100% = 27.8% | £69,500 |
| | | | |
| **Total Reinforcement Cost** | £250,000 | | **£69,500** |

**Extension Assets:**

| | Cost | Apportionment | Customer Contribution |
|---|---|---|---|
| **Contestable Work** | | | |
| Installation of 2 x 25m 11kV cable | £10,000 | n/a | £10,000 |
| Installation of 2 x 11kV metering circuit breakers | £100,000 | n/a | £100,000 |
| | | | |
| **Non-Contestable Work** | | | |
| Joints to 11kV network | £5,000 | n/a | £5,000 |
| | | | |
| **Total Extension Asset Cost** | £115,000 | | **£115,000** |
| | | | |
| **CIC Charges** | | | £1,100 |

**Total Connection Charge = £ 69,500 + £ 115,000 = £ 184,500**

**Example 14: New 25kVA Generation Connection, Voltage Rise Triggered Reinforcement**

An existing Customer wishes to connect a new generator with a Required Capacity for export of 25kVA. The Minimum Scheme for connection of the generator requires the local 25kVA pole mounted transformer to be reinforced with a 100kVA split phase transformer in order to keep voltage rise within acceptable limits. A new 95mm$^2$ service cable is to be installed to the premises.

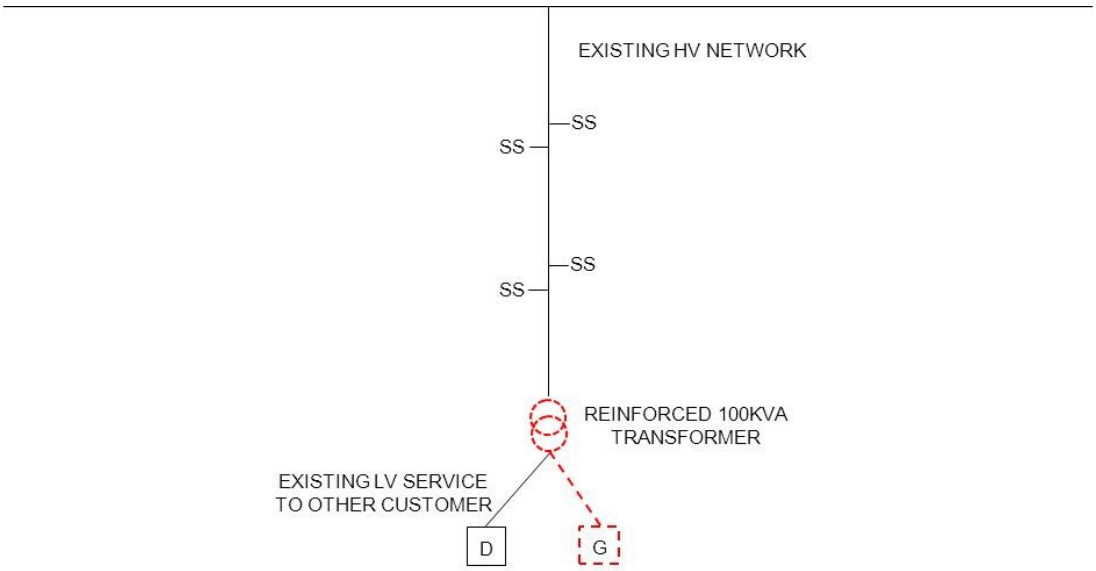


**Reinforcement:**

<u>The RSN for the Reinforcement is the HV/LV transformer.</u>

Security CAF calculation: the numerator in the CAF calculation is the Required Capacity of the Customer, i.e. 25kVA. The denominator is the New Network Capacity following Reinforcement, this being the maximum generation output that could be connected whilst keeping the voltage rise within acceptable limits, i.e. 40kVA in this case.

Fault Level CAF calculation: this scheme does not have any significant Fault Level contribution to the existing shared use distribution network and Fault Level CAF is therefore not applicable here.

The Connection Charge for this Scheme is calculated as follows:

**Reinforcement:**

| | Cost | Apportionment | Customer Contribution |
|---|---|---|---|
| **Non Contestable Work** | | | |
| Replacement 100kVA transformer | £15,000 | 25/40 x 100% = 62.5% | £9,375 |
| | | | |
| **Total Reinforcement Cost** | £15,000 | | **£9,375** |

**Extension Assets:**

| | Cost | Apportionment | Customer Contribution |
|---|---|---|---|
| **Contestable Work** | | | |
| Provision and installation of LV service cable | £1,500 | n/a | £1,500 |
| | | | |
| **Non-Contestable Work** | | | |
| LV joints to network | £500 | n/a | £500 |
| | | | |
| **Total Extension Asset Cost** | £2,000 | | **£2,000** |
| **CIC Charges** | | | £200 |

**Total Connection Charge = £9,375 + £2,000 = £11,375**

(Note – for simplicity, the high-cost generation project threshold of £200/kW has been ignored in this example, but would apply in respect of the costs illustrated. Refer to paragraph 1.15.)

**Example 15: New 2MVA Generation Connection, Voltage Rise Triggered Reinforcement**

A Customer wishes to connect a new generator with a Required Capacity for export purposes of 2MVA. The local 11kV feeder has a large amount of generation already connected and will

need to be reinforced in order to keep voltage rise within acceptable limits. The Minimum Scheme requires Reinforcement of the existing 185mm$^2$ 11kV underground cable with 300mm$^2$ underground cable and installation of a new substation for connection of the 2MVA export capacity. The total length of the reinforced cable is 2km. The thermal rating of the 300mm$^2$ underground cable is 8MVA. The 11kV underground cable on the other side of the normal open point is already 300mm$^2$ and does not require to be reinforced.

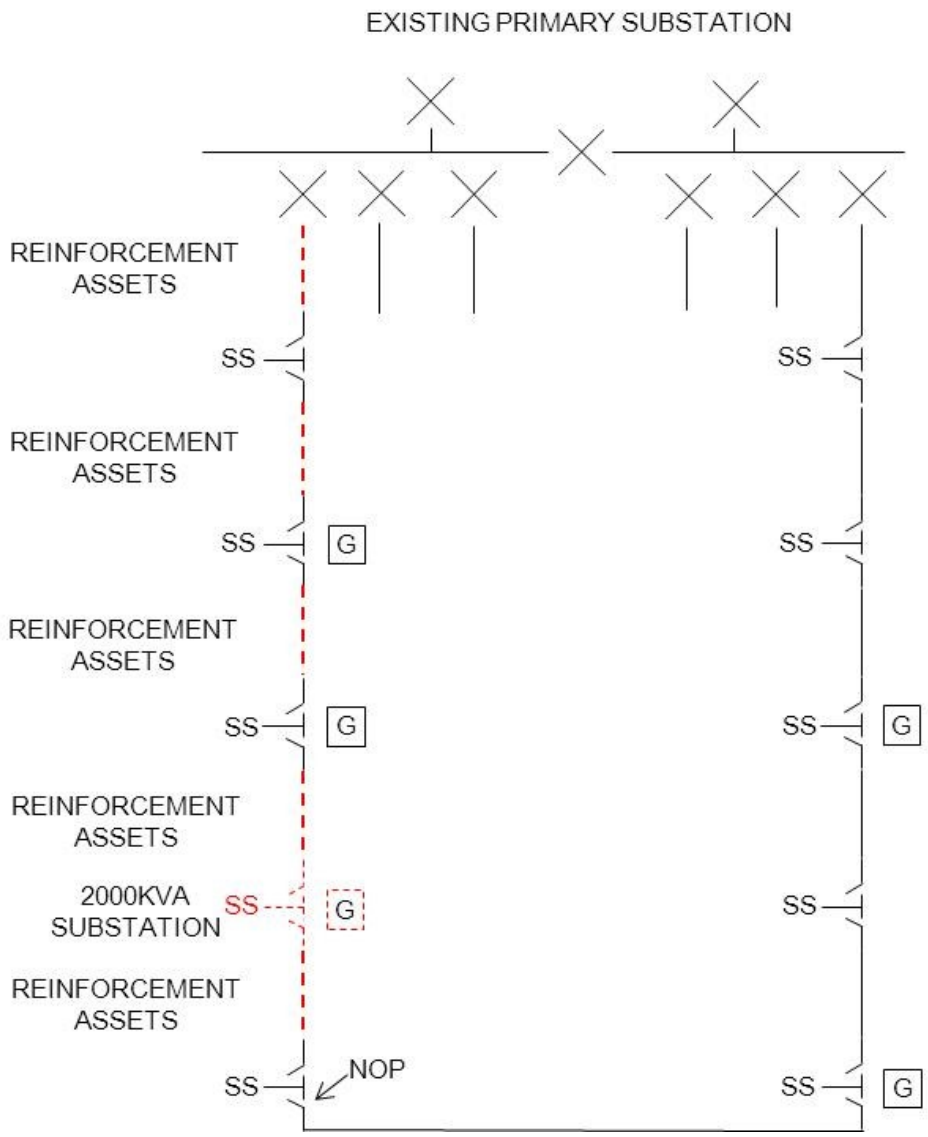


**Reinforcement:**

<u>The RSN for the Reinforcement is the 11kV feeder.</u>

Security CAF calculation: the numerator in the CAF calculation is the Required Capacity of the Customer, i.e. 2MVA. The denominator is the New Network Capacity following Reinforcement,

this being the maximum generation that could be connected whilst keeping the voltage rise within acceptable limits, i.e. 6MVA in this case.

Fault Level CAF calculation: this scheme does not have any significant Fault Level contribution to the existing shared use distribution network and Fault Level CAF is therefore not applicable here.

The Connection Charge for this Scheme is calculated as follows:

**Reinforcement:**

| | **Cost** | **Apportionment** | **Customer Contribution** |
|---|---|---|---|
| **Non Contestable Work** | | | |
| 2km 300mm 11kV cable | £200,000 | 2/6 x 100% = 33.3% | £66,666 |
| | | | |
| **Total Reinforcement Cost** | £200,000 | | **£66,666** |

**Extension Assets:**

| | **Cost** | **Apportionment** | **Customer Contribution** |
|---|---|---|---|
| **Contestable Work** | | | |
| 2MVA 11kV substation | £40,000 | n/a | £40,000 |
| | | | |
| **Non-Contestable Work** | | | |
| 2 by 11kV closing joints | £5,000 | n/a | £5,000 |
| | | | |
| **Total Extension Asset Cost** | £45,000 | | **£45,000** |
| **CIC Charges** | | | £200 |

**Total Connection Charge = £66,666 + £45,000 = £111,666**

**Example 16: New 250kVA Generation Connection, Voltage Rise Triggered Reinforcement**

A Customer wishes to connect a new generator with a Required Capacity for export of 250kVA. The Minimum Scheme for connection of the generator requires the local 11kV overhead line to

be reinforced with 100mm$^2$ conductor over part of its length in order to keep voltage rise within acceptable limits. The thermal capacity of the 100mm$^2$ overhead line is 5MVA. The thermal capacity of the original 50mm$^2$ overhead line is 3MVA. A new 315kVA ground mounted substation requires to be installed at the premises. The overhead line is 1km in length but only 500m is required to be reinforced in order to keep voltage rise within acceptable limits.

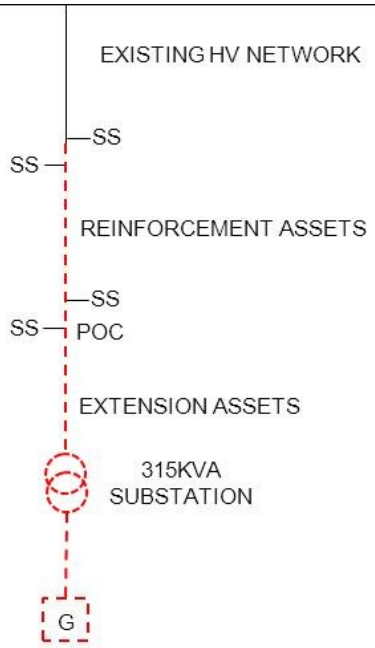


**Reinforcement:**

<u>The RSN for the Reinforcement is the 11kV overhead line.</u>

Security CAF calculation: the numerator in the CAF calculation is the Required Capacity of the Customer, i.e. 250kVA. The denominator is the New Network Capacity following Reinforcement, this being the maximum generation that could be connected whilst keeping the voltage rise within acceptable limits. As the length of overhead line to be reinforced has been determined to accommodate the 250kVA requirement only, then this is also 250kVA in this case.

Fault Level CAF calculation: this scheme does not have any significant Fault Level contribution to the existing shared use distribution network and Fault Level CAF is therefore not applicable here.

The Connection Charge for this Scheme is calculated as follows:

**Reinforcement:**

| | Cost | Apportionment | Customer Contribution |
|---|---|---|---|
| **Non Contestable Work** | | | |
| Replacement 11kV overhead line conductor | £25,000 | 250/250 x 100% = 100% | £25,000 |
| | | | |
| **Total Reinforcement Cost** | £25,000 | | **£25,000** |

**Extension Assets:**

| | Cost | Apportionment | Customer Contribution |
|---|---|---|---|
| **Contestable Work** | | | |
| Provision and installation of 315kVA substation | £50,000 | n/a | £50,000 |
| | | | |
| **Non-Contestable Work** | | | |
| 11kV joint to network | £1,000 | n/a | £1,000 |
| | | | |
| **Total Extension Asset Cost** | £51,000 | | **£51,000** |
| **CIC Charges** | | | £200 |

**Total Connection Charge = £25,000 + £51,000 = £76,000**

# Section 6 – Our Specific Connection Charging Methodology

## Introduction

6.1 This Section sets out our Specific Connection Charging Methodology.

6.2 Any changes to this Section must be in accordance with the provisions set out in Condition 13 of the Licence.

## Payment Terms

6.3 The Connection Charge is normally payable in full in advance of Energisation of the connection. For simple service connections, where work is minimal, we recommend that payment is made at the same time as you accept our Connection/POC Offer as this will expedite the programming of the work. In the case of a phased development, or connections requiring major electrical infrastructure, e.g. a housing estate, large commercial development, or large generator, the Connection Charge will be payable in stages. An initial payment will be required at the time you accept the Connnection/POC Offer and further payment will be required by instalment to coincide with our incidence of expenditure.

## Operations, Repairs and Maintenance

6.4 The cost of future operations, repairs and maintenance of the connection assets and our Distribution System is normally recovered through the on-going charges for use of system you pay as part of your quarterly or monthly electricity supply bill.

6.5 Where you request additional requirements which are above the normal level of assets required to be installed under the Minimum Scheme a capitalised payment to cover future operations, repairs and maintenance of the additional assets may be included as part of the Connection Charge. The capitalised costs are derived from the annual estimated costs of operation, repairs and maintenance relating to the additional assets used for the connection using an appropriate discounted rate reflecting the regulatory cost of capital. They are usually expressed as a percentage of the initial capital value of the additional assets.

## Competition in Connections

## Non-Contestable Work

6.6 The following works in respect of the existing Distribution System are deemed to be Non-Contestable:

- Processing your application and Distribution System planning for the connection;
- Deciding upon the POC to the Distribution System (note in certain circumstances ICPs will be able to carry out this work as explained in the Competition in Connections Code of Practice)
- Connection of Contestable Works to the Distribution System other than at LV;
- Connection of the Extension Assets or diverted assets to the Distribution System and their Energisation (An accredited ICP may, with our prior agreement, connect Extension Assets where the connection is made to that part of the Distribution System

that falls within the development area and has previously been installed by the ICP and Adopted by us under the same Scheme);

- Design, planning and specification of any works for Reinforcement of our Distribution System;
- Carrying out of any works for Reinforcement of our Distribution System where the conditions for such activity being Contestable Work are not met. Reinforcement (other than design, and specification) and diversionary works may be contested when associated with the provision of a connection and subject to the circumstances described in Section 6.13);
- Design, planning, specification and carrying out of any works for diversion of the Distribution System where the conditions for such activity being Contestable Work are not met (the design of the diversionary works may be contested when associated with the provision of a connection and subject to the circumstances described in Section 6.13); and
- Removal of existing Electrical Plant and Electric Lines.

6.7 The following works in respect of the Contestable Work are deemed to be Non-Contestable:

- Specification of design and installation criteria and materials to be used for Contestable Works;
- Concluding any Land Rights and other consents that we require;
- Approval of the ICP's design (note in certain circumstances ICPs will be able to carry out this work as explained in the Competition in Connections Code of Practice);
- Operation, repair and maintenance of the Electrical Plant and the Electric Lines following adoption by us; and
- Inspection, monitoring and testing of any Contestable Work.

## Factors influencing Competition in Connection (CIC) Charges

6.8 Illustrative costs for Competition in Connection (CIC) Charges are shown in Section 7. Such illustrative charges reflect normal cost situations. The actual charges associated with specific projects will be based on our estimate of the level of the work required. The factors which influence the actual level of charges include:

- The amount of network analysis required to determine the optimum means of providing connections. The amount of network analysis undertaken would be influenced by, amongst other factors, the number of connections and connection capacity requested by the applicant, characteristics of the load to be connected and the capacity of the existing Distribution System.
- The level of management and job scheduling required for the connection project. The management and job scheduling costs associated with projects that are completed over a long timescale would tend to be higher than those costs associated with projects that are completed over a short timescale.
- The number and complexity of Land Rights required. Some technically simple connections, such as the installation of an LV underground cable, could require more than one wayleave or consent.

## Contestable Work

6.9 In contrast, the following work may, at your discretion, be carried out in its entirety either by us or by an ICP, in accordance with the approved design and specification:

- Design of the Contestable Work;
- The procurement and provision of equipment and materials to our current specification for the Contestable Work;
- Trenching and other preparation of the site, including the circuit routes between the development and the POC;
- Construction of the Contestable Work;
- Connection of Contestable Works to the Distribution System and their Energisation at LV only;
- Recording of work done and of the location of cable routes and other equipment on site or elsewhere (where those assets are installed by the ICP), and the provision of this information to us;
- Reinstatement (both temporary, if appropriate, and permanent); and
- Making provision for the installation of metering equipment.

Under certain circumstances and at our sole discretion, we may agree with you to undertake part of the Contestable Work whilst we carry out the remainder where it is practical to do so.

6.10 The Contestable design element must comply with the appropriate part of Engineering Recommendation G81 and any of our specific requirements (see 6.12). Following receipt of the design of the Contestable Work, we shall either provide confirmation of approval or explanation for rejection. Such approval shall not be unreasonably withheld. A charge will be made for the approval of any design work undertaken by an ICP. A table showing charges for providing design approval is given in Section 7.17. Information regarding these charges will be included within the POC Offer.

6.11 We may, on occasion, request the ICP to include additional features in the design. Such request shall be made in writing and as soon as is reasonably practicable. Where the ICP accepts this request we will meet the agreed additional cost.

6.12 The specification for design, materials, installation and recording, is governed by Engineering Recommendation G81, a seven part national framework document administered by the Energy Networks Association that is designed to be supplemented by our specific appendices. Any ICP carrying out such Contestable Work must comply with the specification. The seven parts comprise:

<u>For green field and brown field housing estates:</u>

Part 1: Framework for Design and Planning

Part 2: Framework for Materials Specification

Part 3: Framework for Installation and Records

<u>For industrial and commercial connections:</u>

Part 4: Framework for Design and Planning

Part 5: Framework for Materials Specification

Part 6: Framework for Installation and Records

All of the above must be read in conjunction with our corresponding suite of Appendices that supplement Engineering Recommendation G81.

<u>For diversionary and Reinforcement works:</u>

Part 7: Framework for contestable diversionary and Reinforcement underground and overhead works not exceeding 33kV and HV/LV distribution substations.

These documents are available to view on our website at www.westernpower.co.uk.

## Contestable Reinforcement and Diversionary Work

6.13 Certain types of Reinforcement and diversionary work may also be carried out by suitably accredited ICPs for adoption by us. The scope of such work is limited to Reinforcement and diversionary works, associated with a connection, which:

- are new works that are physically and electrically separate from our existing Distribution System;
- do not require access to our existing operational areas;
- are fully funded by the single third party who is seeking the connection; and
- are restricted to works to install overhead lines and underground cables at voltage levels not exceeding 33kV and works to install HV/LV distribution substations. The design of Reinforcement works can require a large volume of information about the Distribution System. The level and complexity of information that would need to be made available to allow the ICP to carry out such design works is likely to outweigh the benefits of including design work within the scope of contestability. The design of connection Reinforcement therefore remains Non-contestable.

6.14 For operational reasons, and to enable us to comply with our obligations under the Act and the Licence, there will be site specific circumstances where the works referred to in this section are deemed Non-Contestable.

6.15 The design of the majority of diversion projects associated with connection projects is likely to be less complex than the design of Reinforcement Schemes. The design of diversionary works can be contestable for overhead lines and underground cables not exceeding 33kV and for HV/LV distribution substations.

6.16 The dismantlement and disposal of our existing assets remains Non-Contestable because it would require access to our existing assets and/or operational areas.

## Table of Contestable/Non-Contestable Work

6.17 The following table summarises elements of the work as either Contestable or Non-Contestable and the types of company that can complete the works.

| Ref | Activity | Contestable(C)/ Non- Contestable (N) | Company | ICP | Applicant or Developer |
|---|---|---|---|---|---|
| 1 | Determine POC to Distribution System | N | Yes | Yes[4] | No |
| 2 | Design of Extension Assets | C | Yes | Yes | No |
| 3 | Design upstream Reinforcement works associated with new connections. | N | Yes | No | No |
| 4 | Design diversionary works associated with new connections | C | Yes | Yes | No |
| 5 | Design approval | N | Yes | Yes[4] | No |
| 6 | Plant and materials specifications | N | Yes | No | No |
| 7 | Procure materials for own works | C | Yes | Yes | No |

| Ref | Activity | Contestable(C)/ Non- Contestable (N) | Company | ICP | Applicant or Developer |
|---|---|---|---|---|---|
| 8 | Land Rights negotiations with third party landowners | C | Yes | Yes | Yes |
| 9 | Produce wayleave/easement documentation and enter into agreements with third party landowners | N | Yes | No | No |
| 10 | Trench excavation and duct installation – on site | C | Yes | Yes | Yes |
| 11 | Trench excavation and duct installation – on public highway | C | Yes | Yes | No |
| 12 | Construction of substation buildings and other civil works – on site | C | Yes | Yes | Yes |
| 13 | Cable laying for own works | C | Yes | Yes | No |
| 14 | Substation plant installation for own works | C | Yes | Yes | No |
| 15 | Excavation for jointing bay – on site | C | Yes | Yes | Yes |
| 16 | Excavation for own works jointing bay – public highway | C | Yes | Yes | No |
| 17 | Jointing (dead) of cables within Extension Assets | C | Yes | Yes | No |
| 18 | Connection of Contestable Works (live) to the Distribution System. For the avoidance of doubt this applies to LV works only. | C | Yes | Yes | No |
| 19 | Connection of Contestable Works to the Distribution System at HV . | C | Yes | Yes | No |
| 20 | Connection of Contestable Works to the Distribution System at EHV. | N | Yes | No | No |
| 21 | Excavation for joints to connect Contestable Works to Distribution System (closing joints) | C | Yes | Yes | No |
| 22 | Live LV jointing on newly adopted New Extension Assets[1] | C | Yes | Yes | No |
| 23 | Reinforcement/diversionary work on the existing Distribution System | N | Yes | No[2] | No |
| 24 | Quality assurance inspections | N | Yes | No | No |
| 25 | Testing of Extension Assets installed by ICP | C | Yes | Yes | No |
| 26 | Commissioning and connection of Extension Assets to the Distribution System | N | Yes | No | No |
| 27 | Recording of installed assets | C | Yes | Yes[3] | No |
| 28 | Operations, repairs and maintenance | N | Yes | No | No |

[1] Live LV jointing may be carried out by a suitably accredited ICP subject to our prior agreement

[2] Sole funded Reinforcement and diversionary works associated with the new connection carried out independently of the existing Distribution System will be treated as Contestable Work.

[3] Only for Contestable Works installed by the ICP

4 In certain circumstances ICPs will be able to carry out this work as explained in the Competition in Connections Code of Practice

## Inspection and Monitoring Regime

6.18 We will inspect and monitor some of the Contestable Work provided by the appointed ICP. The number of visits required will be determined according to the actual connection proposals and the inspection regime shown below. Information regarding inspections and the associated charges will be specified within the POC Offer.

6.19 The below table will be used to calculate the actual numbers of inspections to be made where an ICP undertakes the Contestable Work

| Calculating Site Visits for Monitoring of Contestable Schemes | | | | | |
|---|---|---|---|---|---|
| **Item** | **Calculation** | **Comments** | **First Audit Level** | **Second Audit Level** | **Third Audit Level** |
| **Mains** | | | | | |
| LV Mains | 1 Site Visit for each 100m of Mains cable installed | Round up to nearest 100m of mains cable installed | Apply calculation to 50% of Mains cable installed | Apply calculation to 10% of Mains cable installed | Apply calculation to 5% of Mains cable installed |
| HV Mains | 1 Site Visit for each 100m of Mains cable installed | Round up to nearest 100m of mains cable installed | Apply calculation to 50% of Mains cable installed | Apply calculation to 10% of Mains cable installed | Apply calculation to 5% of Mains cable installed |
| Trenchless | 1 Site Visit for each 50m of Mains cable installed | Round up to nearest 50m of mains cable installed | Apply calculation to 100% of Mains cable installed | Apply calculation to 100% of Mains cable installed | Apply calculation to 100% of Mains cable installed |
| LV Joints | 5 Joints = 1 Site Visit | Estimate 1 joint per 100m of mains cable installed | Apply calculation to 50% of Mains cable installed | Apply calculation to 10% of Mains cable installed | Apply calculation to 5% of Mains cable installed |
| HV Joints | 1 Joint = 1 Site Visit | Estimate 1 Joint = 1 Joint per 200m of mains cable | Apply calculation to 50% of Mains cable installed | Apply calculation to 10% of Mains cable installed | Apply calculation to 5% of Mains cable installed |

| Service (Multiple) Deemed to be greater than 4 Plots | | | | | |
|---|---|---|---|---|---|
| Service Cable Installation | 5 Installation / Plots = 1 Site Visit | Minimum 1 Site Visit | Apply calculation to 10% of Plots | Apply calculation to 2% of Plots | Apply calculation to 2% of Plots |
| Service Joints | 5 Joints = 1 Site Visit | Minimum 1 Site Visit | Apply calculation to 20% of Plots | Apply calculation to 5% of Plots | Apply calculation to 2% of Plots |
| Service Terminations | 10 plots = 1 Site Visit | Minimum 1 Site Visit | Apply calculation to 20% of Plots | Apply calculation to 2% of Plots | Apply calculation to 2% of Plots |
| Polarity & Loop Impedance Check | 5 plots = 1 Site Visit | Minimum 1 Site Visit | Apply calculation to 50% of Plots | Apply calculation to 20% of Plots | Apply calculation to 10% of Plots |
| **Service (Individual) Deemed to be less than 5 plots (For all items below 5 plots count as single Plot)** | | | | | |
| Service Cable Installation | 100% of Trench and cable | Minimum 1 Site Visit | 1 Site Visit | 1 Site Visit | 1 Site Visit |
| Service Termination | 100% of Terminatio n | Minimum 1 Site Visit | 1 Site Visit | 1 Site Visit | 1 Site Visit |
| **Substations** | | | | | |
| Substation Commissioni ng | 1 Site Visit to Witness Testing | Maximum 1 Site Visit per Substation | 100% x No of Substations x Unit Site Visit Cost | 20% x No of Substations x Unit Site Visit Cost | 5% x No of Substation s x Unit Site Visit Cost |
| Foundations | 1 Site Visit per Substation | Minimum 1 Site Visit | Minimum 1 Site Visit | Minimum 1 Site Visit | Minimum 1 Site Visit |
| Transformer & Switchgear | 1 Site Visit per Substation | Minimum 1 Site Visit | Minimum 1 Site Visit | Minimum 1 Site Visit | Minimum 1 Site Visit |

**Notes:**

1. The content of this table is based on the Ofgem Competition in Connections to Electricity Distribution Systems Decision Document – Part B February 2005 60/5 Appendix 5.
2. Audit Level criterion is based on a Western Power Distribution "Health Index" aligned to Item 1 and is also directly associated with satisfactory/unsatisfactory work activity.
3. Charges will be levied in accordance with the "calculation" criteria above.
4. For the inspection of the wiring installation associated with HV and LV CT Metering installations, a separate charge will be levied where applicable.

| Item | Calculation | Value | Comments |
|---|---|---|---|
| **Mains** | | | |
| LV Mains | 50% of mains cable installed. | 1 Site Visit for each 100m of mains cable installed. | Round up to nearest 100 m of mains cable installed. |

| | | | |
|---|---|---|---|
| HV Mains | 50% of mains cable installed. | 1 Site Visit for each 100m of mains cable installed. | Round up to nearest 100m of mains cable installed. |
| Trenchless Installation | - | 1 Site Visit per 50m mains cable installed. | Round up to nearest 50m of mains cable installed. |
| LV Joints | 50% of joints. | 5 joints = 1 Visit. | Estimate 1 joint per 100m of mains cable installed. |
| HV Joints | 100% of substations on site. | 1 Site Visit per substation. | Estimate all joints and switchgear end boxes. |
| **Service (Multiple)** | | | |
| Service Cable Installation | 10% of Plots. | 5 Installations = 1 Site Visit. | Minimum 1 Site Visit. |
| Service Joints | 20% of Plots. | 5 Joints = 1 Site Visit. | Minimum 1 Site Visit. |
| Service Terminations | 20% of Plots | 10 Plots = 1 Site Visit. | Minimum 1 Site Visit. |
| Polarity & Loop Impedance Checks | 20% of Plots | 10 plots = 1 Site Visit. | Minimum 1 Site Visit. |
| **Service (Individual)** | | | |
| Service Cable Installation | 100% of cable and trench. | 1 Site Visit | Minimum 1 Site Visit |
| Service Termination | 100% of Termination | 1 Site Visit | Minimum 1 Site Visit |
| **Note:** For the inspection of the wiring installation associated with HV and LV CT Metering, a separate charge will be levied where applicable. | | | |
| **Substations** | | | |
| Substation Commissioning | 100% of substations on site. | 1 Site Visit to witness general testing per substation. | Estimate 1 additional Site Visit for protection testing where applicable. |
| Foundations | 100% of substations on site. | 1 Visit per substation. | Minimum 1 Site Visit |
| Transformer & Switchgear | 100% of substations on site. | 1 Visit per substation. | Minimum 1 Site Visit |

Note: Excludes polarity checks and earth fault loop impedance testing.

6.20 Further to paragraphs 5.56 to 5.58, on receipt of a request to permanently disconnect a connection we will take all reasonable steps to remove the equipment in accordance with your reasonable requirements or, where a substation site has been provided by you, we may wish to exercise our right under the Connection Agreement to call for the grant of a lease or the conveyance of freehold on such reasonable terms and conditions as may be agreed. We will make a charge for carrying out the disconnection work.

Normally low voltage service termination equipment will be removed within 21 working days but up to six months' notice may be required to remove high voltage substation plant. In the case of EHV connections we should be consulted at an early stage and a programme for the removal of equipment agreed.

## Connection Offer and POC Offer Terms and Conditions

6.21 Connection Offers and POC Offers are on our standard terms and conditions. Where the standard terms and conditions are not entirely appropriate to your connection requirements we will endeavor to negotiate alternative terms and conditions with you. In such cases we may seek to recover from you our costs incurred including where we appoint legal advisors. Such terms will be in full agreement with you. Where you wish to agree terms and conditions that fall outside of the requirements of sections 16 - 21 of the Act we may agree a special connection agreement in accordance with section 22 of the Act.

## Land Rights

6.22 We require the transfer of the freehold or alternatively the grant of long leasehold of any substation site which forms part of the Contestable or Non-Contestable Works.

6.23 We require the grant of a permanent easement (deed of grant) for any Electric Line that forms part of the Contestable or Non-Contestable Works which will not form part of an adopted or prospectively adopted highway. We may in some cases accept a wayleave as an alternative.

6.24 In instances we cannot obtain Land Rights by negotiation; we may exercise our powers of compulsory purchase under the Electricity Act 1989 or apply under the Act to the Secretary of State for a 'Necessary Wayleave'.

## Operation & Maintenance Percentage

6.25 The Operation and Maintenance Percentage referred to in 5.12 is 18%.

## Margin included in Connection Offers

6.26 We are allowed to charge a margin on certain elements of connections work as allowed by our Licence. Margins can only be applied to Contestable Work (construction of Extension Assets and other activities as set out in paragraphs 6.9 to 6.17).

6.27 The margin (if any) is either "regulated" which is set at 4% by our Licence or is "unregulated" which is not set by our Licence. Our ability to apply these two types of margin is governed by the Authority.

6.28 The table below indicates which type of margin is included in our charges for each type of work.

| | Regulated Margin | Unregulated Margin |
|---|---|---|
| In respect of Metered premises owned or occupied by **Demand Customers:** | | |
| (i) **Single LV Service Demand Connections**: defined in Section 7.6 | **N/A** | **N/A** |
| (ii) **Small Project Demand Connections**: defined in Section 7.6 | **N/A** | **N/A** |
| (iii) **LV work:** other low voltage Connection Activities involving only low voltage works. | **Yes** | **No** |

| | | |
|---|---|---|
| (iv) **HV work:** low voltage or high voltage Connection Activities involving high voltage work | **Yes** | **No** |
| (v) **HV and EHV work:** low voltage or high voltage Connection Activities involving extra high voltage work. | **No** | **Yes** |
| (vi) **EHV work and above:** extra high voltage and 132kV Connection Activities. | **No** | **Yes** |
| In respect of Metered premises in which **Distributed Generation** is situated: | | |
| (vii) **LV work:** low voltage Connection Activities involving only low voltage work. | **Yes** | **No** |
| (viii) **HV and EHV work:** any Connection Activities involving work at high voltage or above. | **Yes** | **No** |
| In respect of **unmetered** premises: | | |
| (ix) **LA work:** New Connection Activities in respect of local authority premises. | **No** | **Yes** |
| (x) **PFI work:** New Connection Activities under private finance initiatives. | **No** | **Yes** |
| (xi) **Other work:** all other non-local authority and non-PFI unmetered connections work. | **Yes** | **No** |

## Credit for equipment recovery associated with Temporary Connections

6.29 The net value referred to in paragraph 5.33 will not be provided where the administrative costs incurred are higher than the value of recovered equipment that we can subsequently reuse (net of depreciation and removal and refurbishment costs). The de-minimus level, below which it is inefficient to provide a refund is £100. This value is based on the costs of:

- determining whether the equipment can be reused;
- calculating the refund; and
- processing any credit.

# Section 7 – Connection Charging Statement

## Introduction

7.1 This Section sets out our Connection Charging Statement prepared in accordance with Standard Licence Condition 14 of the Licence.

7.2 The purpose of this statement is to enable any person to make a reasonable estimate of the charges liable for the provision of a connection.

7.3 The minimum and maximum values of charges shown in the following tables are designed to provide you with an indication of the range of charges that would normally apply to a particular activity and are therefore not absolute limits on the minimum nor the maximum value of charge that may be levied. The actual charge for each activity will be calculated based upon the project specific circumstances which may take account of the cost apportionment rules and other factors that will influence the value of the charge payable by you.

7.4 All indicative charges in the tables below are exclusive of VAT.

7.5 Connection Charges may contain some or all of the cost elements indicated in the following table. You do not need to have requested a Budget Estimate or Feasibility Study before you request a formal Connection Offer.

| | **Charge Element** | **Explanation** |
|---|---|---|
| A | Budget Estimates | To identify the budget costs for connection to the existing Distribution System in advance of a formal application. |
| B | Feasibility Studies | To identify options for connection to the existing Distribution System in advance of a formal application. |
| C | Assessment and Design for all relevant work | To identify the most appropriate point on the existing Distribution System for connection of the Extension Assets, the design of the Extension Assets, any required Reinforcement and prepare the Connection Offer. |
| D | CIC Assessment and Design of the Non-Contestable Work | To identify the most appropriate point on the existing Distribution System for connection of the Extension Assets, the design of any required Reinforcement and prepare the POC Offer. |
| E | CIC Design Approval of the Contestable Work | For CIC the approval of an Extension Assets design produced by an ICP. |
| F | Construction | Electric Lines and Electrical Plant forming part of the Extension Assets and Reinforcement (both Contestable and Non-Contestable Assets). |
| G | CIC Final Works and Phased Energisation | Final Works means the installation of the connection equipment in such a way that, subject to Energisation, the Premises are physically able to receive a supply of electricity from our Distribution System or (as the case may be) our Distribution System is physically able to receive a supply of electricity from the Premises.<br>Phased Energisation, in relation to a part only of the Premises, means the physical ability, subject to the completion of Final Works, to allow an electrical current to flow from (or to) our Distribution System to (or from) that part by means of the insertion of a fuse or as a result of a switching operation. |

| | | |
|---|---|---|
| H | CIC Inspection and Monitoring | Inspection and Monitoring by us of the Contestable Work constructed by an ICP. |
| I | Land Rights | The costs of securing Land Rights in respect of Extension Assets and Reinforcement |
| J | Other | Other miscellaneous charges associated with the provision of the connection. |

7.6 The following definitions are used in this Section.

| | |
|---|---|
| **Single LV Service Demand Connection** | an LV demand connection to single Premises, involving a single-phase connection and no significant work other than the provision of a service line and the electricity distributor's fuses. |
| **Service Line** | a low-voltage electric line or any part of that line that will, at the time it is provided, be used only for supplying single Premises, excluding any part of the line that, at the time it is provided, is intended by the distributor to be used to enable it to provide a connection to other Premises in respect of which the distributor has received, or would reasonably expect within the following 12 months to receive, a notice under section 16A(1) of the Act. |
| **Small Project Demand Connection** | a connection (other than of a load that could reasonably be expected to cause disruption to other customers) (via low-voltage circuits fused at 100 amperes or less per phase with whole-current metering), and where the highest voltage of the assets involved in providing such connection, and any associated works, is low voltage, to –<br>a) a development Scheme requiring more than one but fewer than five single-phase connections at domestic Premises and involving only the provision of a service line and the electricity distributor's fuses; or<br>(b) a development Scheme requiring fewer than five single-phase or two-phase connections at domestic Premises and involving an extension of the existing low voltage network; or<br>(c) a single Premises requiring a two-phase or three-phase connection and involving only the provision of a service line and the electricity distributor's fuses. |

## Quotation Accuracy Scheme

7.7 We are required in our Licence to submit from time to time to the Authority for approval a Quotation Accuracy Scheme (QAS). The QAS is intended to provide information so that you can assess whether the specific Connection Charge included within our Connection Offer to you is accurate in terms of consistency with our Connection Charging Statement.

7.8 The QAS only applies to Single LV Service Demand Connections and Small Project Demand Connections. The cost tables for these projects are given in tables F1 and F2.

7.9 The principles of the QAS are as follows:

- The QAS is not intended to be a mechanism for you to challenge the absolute cost of the Connection Charge.

- If the information included in the Connection Offer is sufficient such that the Connection Charge is within the bands of indicative costs then you would not be eligible to challenge the accuracy of the Connection Offer..
- If the information included in the Connection Offer is such that the Connection Charge is outside the bands of indicative costs then you would be eligible to challenge the accuracy of the Connection Offer. You would be required to provide a statement to explain why you believed the quotation to be outside the range.
- Absence of information in the Connection Offer does not in itself mean that the Connection Charge is inaccurate but does allow you to enter the QAS. This therefore acts as an incentive for us to include additional information to you to limit the number of customers eligible to enter the QAS.
- Where we review the Connection Offer and accept that we have not provided enough information and therefore the Connection Charge is outside the bands of indicative costs, the Connection Charge will be deemed inaccurate, a penalty payment will be paid to you and a new Connection Offer issued. The revised Connection Charge may in fact be for the same value but with additional information provided.
- If we can demonstrate that additional information was provided in the Connection Offer in support of our Connection Charge then no penalty payment will be made.
- Where we review the Connection Offer and accept that we have made an error, for example in estimating quantities then the Connection Charge will be deemed inaccurate. In these circumstances, a penalty payment will be paid to you and a new Connection Offer issued.
- If we are able to provide additional information in support of our charges then no payment would be made.
- The accuracy assessment will work both ways, i.e. any error may be an omission and a re-issued Connection Offer could be higher or lower than the original Connection Charge.
- Some tolerances for the error would apply, for example within 5% or £150 (whichever is the greater). This prevents a disproportionate effect for say small lengths of cable if our view and your view on the required length differ.
- The QAS is not intended to introduce standard charges for connections customers.
- The QAS will have specified time limits whereby you can challenge the Connection Charge but will not preclude you from accepting the Connection Charge.

7.10 Where you believe the Connection Offer provided by us is outside the "bandwidth" in the indicative charges tables contained in this statement then you can enter the QAS.

7.11 You can enter the QAS by contacting us at the address given in paragraph 1.31.

# A Budget Estimates

7.12 If you are unable to make a formal Application because certain information that we require to make a Connection Offer is not available or if you are not in a position to progress to the construction phase, we can provide an indication of the charge for making the connection by means of a Budget Estimate (see paragraph 2.8 for further details). Our charges associated with the provision of Budget Estimates in advance of a formal Application are set out in the table below:-

| **Category** | **Charge** |
|---|---|
| **Demand** | |
| Single LV Service Demand Connection[A] | Nil |
| 2 to 4 services single phase LV, no extension to LV network[B] | Nil |
| 1-4 Premises, single phase LV, extension to the LV network[C] required | Nil |
| 1 three phase LV service with whole current metering to a single Premises[D] | Nil |
| Other LV connection(s) with a total load up to 100kVA LV | Nil |
| Other LV connection(s) with a total load greater than 100kVA and up to 250kVA LV not covered by the above | Nil |
| Connection greater than 250kVA and up to 1MVA at LV | Nil |
| Connection up to 250kVA at HV | Nil |
| Connection greater than 250kVA and up to 1MVA at HV | Nil |
| Connection greater than 1MVA and up to 3MVA at HV | Nil |
| Connection greater than 3MVA and up to 10MVA at HV | Nil |
| Connection up to 10MVA at EHV and at 132kV | £300* |
| Connection greater than 10MVA and up to 50MVA | £300* |
| Connection greater than 50MVA | £300* |
| **Generation** | |
| Connection of a single Small Scale Embedded Generator | Nil |

| | |
|---|---|
| Connection of other generation up to 20kVA not covered by the above at LV | Nil |
| Connection of other generation greater than 20kVA and up to 50kVA at LV | Nil |
| Connection of other generation greater than 50kVA at LV | Nil |
| Connection of generation up to 250kVA at HV | Nil |
| Connection of generation greater than 250kVA and up to 1MVA at HV | Nil |
| Connection of generation greater than 1MVA at HV | Nil |
| Connection of generation up to 10MVA at EHV and at 132kV | £300* |
| Connection of generation greater than 10MVA and up to 50MVA at EHV and at 132kV | £300* |
| Connection of generation greater than 50MVA | £300* |
| A Refer to 7.6 above for detailed definition.<br>B Refer to 7.6 above, Small Project Demand Connection (a) for detailed definition.<br>C Refer to 7.6 above, Small Project Demand Connection (b) for detailed definition.<br>D Refer to 7.6 above, Small Project Demand Connection (c) for detailed definition. | |

Note 1: "LV", "HV", or "EHV" in the table above denotes the highest voltage of works including any associated Reinforcement or diversionary works. For the avoidance of doubt the voltage will be categorised in line with Ofgem's guidance on categorisation for Guaranteed Standards of Performance, e.g. installing a new 11kV circuit breaker at a 132/11kV or 33/11kV substation will be categorised as EHV.

Note 2: "Small Scale Embedded Generator" as defined in 2.29

* We will issue a free budget estimate for two options for the same site but a charge will apply for each option over and above this within a six month period. An option is defined as either a different capacity or a different technology type. A site will be defined as the closest network point or point of connection (POC) if the land is owned by one landowner or a geographical point or address within a radius of 1km.

## B Feasibility Studies

7.13 Prior to making a formal Application for a Connection Offer you may request we undertake a Feasibility Study to establish the viability of making a connection to our Distribution System. We will carry out preliminary network analysis and provide an indicative connection assessment which will include the results of the network analysis and an outline of the engineering scheme to allow the connection. We will require payment in advance of the study being made and will notify you of the relevant study charges prior to commencing work.

7.14 Our charges associated with the provision of Feasibility Studies involving design in advance of a formal Connection Application are set out in the table below. Charges for any other activities, such as excavation works will be individually assessed and agreed with you before these are undertaken. The Minimum Charge will always apply. Additional charges will only be applicable where the Applicant amends their connection requirements which necessitates us to carry out further analysis or assessment:-

| **Category** | **Minimum Charge £** | **Additional Charge** |
|---|---|---|
| **Demand** | | |
| Single LV Service Demand Connection[A] | £144 | |
| 2 to 4 services single phase LV, no extension to LV network[B] | £218 | |
| 1-4 Premises, single phase LV, extension to the LV network[C] required | £288 | |
| 1 three phase LV service with whole current metering to a single Premises[D] | £144 | |
| Other LV connection(s) with a total load up to 100kVA LV | £235 | |
| Other LV connection(s) with a total load greater than 100kVA and up to 250kVA LV not | £413 | |
| Connection greater than 250kVA and up to 1MVA at LV | £550 | |
| Connection up to 250kVA at HV | £550 | |
| Connection greater than 250kVA and up to 1MVA at HV | £550 | |
| Connection greater than 1MVA and up to 3MVA at HV | £703 | |
| Connection greater than 3MVA and up to 10MVA at HV | £1,722 | |
| Connection up to 10MVA at EHV and at 132kV | £2,583 | |

| | | |
|---|---|---|
| Connection greater than 10MVA and up to 50MVA | £2,583 | |
| Connection greater than 50MVA | £3,444 | |
| **Generation** | | |
| Connection of a single Small Scale Embedded Generator | £172 | |
| Connection of other generation up to 20kVA not covered by the above at LV | £565 | |
| Connection of other generation greater than 20kVA and up to 50kVA at LV | £765 | |
| Connection of other generation greater than 50kVA at LV | £1,070 | |
| Connection of generation up to 250kVA at HV | £1,223 | |
| Connection of generation greater than 250kVA and up to 1MVA at HV | £1,529 | |
| Connection of generation greater than 1MVA at HV | £3,014 | |
| Connection of generation up to 10MVA at EHV and at 132kV | £4,736 | |
| Connection of generation greater than 10MVA and up to 50MVA at EHV and at 132kV | £4,736 | |
| Connection of generation greater than 50MVA | £5,597 | |
| A Refer to 7.6 above for detailed definition.<br>B Refer to 7.6 above, Small Project Demand Connection (a) for detailed definition.<br>C Refer to 7.6 above, Small Project Demand Connection (b) for detailed definition.<br>D Refer to 7.6 above, Small Project Demand Connection (c) for detailed definition. | | |

Note 1: "LV", "HV", or "EHV" in the table above denotes the highest voltage of works including any associated Reinforcement or diversionary works. For the avoidance of doubt the voltage will be categorised in line with Ofgem's guidance on categorisation for Guaranteed Standards of Performance, e.g. installing a new 11kV circuit breaker at a 132/11kV or 33/11kV substation will be categorised as EHV.

Note 2: "Small Scale Embedded Generator" as defined in 2.29

## C Assessment and Design for all relevant work

7.15 For applications received in accordance with Section 2 of this Statement, our charges associated with assessing the impact of the connection on the Distribution System, designing any Extension Assets and/ or Reinforcement and processing the application are set out in the table below. We may levy additional assessment and design charges where the work undertaken exceeds the costs included in the minimum charge or requires assessing the impact of the connection on the transmission system. The charges are standard charges based on the size and type of the connection and the highest voltage of assets installed including any associated Reinforcement or diversionary works. The table shows the amount of the charge that is payable in relation to the provision of our connection offer, and the amount of the charge that is payable in relation to acceptance of our connection offer. Further information about the timing of these charges and the circumstances where each applies may be provided elsewhere in this document.

7.16

| **Category** | **Minimum Charge £** | **Additional Charge** | **Timing of Charge** | |
|---|---|---|---|---|
| | | | **Connection Offer** | **Acceptance** |
| **Demand** | | | | |
| Single LV Service Demand Connection[A] | £132 | N/A | | |
| 2 to 4 services single phase LV, no extension to | £206 | N/A | | |
| 1-4 Premises, single phase LV, extension to the | £280 | N/A | | |
| 1 three phase LV service with whole current | £132 | N/A | | |
| Other LV connection(s) with a total load up to | £442 | | 0 | £442 |
| Other LV connection(s) with a total load greater than 100kVA and up to 250kVA LV | £653 | | 0 | £653 |
| Connection greater than 250kVA and up to | £842 | | 0 | £842 |
| Connection up to 250kVA at HV | £1,014 | | 0 | £1,014 |
| Connection greater than 250kVA and up to | £1,014 | | 0 | £1,014 |
| Connection greater than 1MVA and up to | £1,389 | | 0 | £1,389 |

| | | | | |
|---|---|---|---|---|
| Connection greater than 3MVA and up to | £2,475 | | 0 | £2,475 |
| Connection up to 10MVA at EHVand at 132kV | £3,686 | | £3,686 | 0 |
| Connection greater than 10MVA and up to | £4,547 | | £4,547 | 0 |
| Connection greater than 50MVA | £6,189 | | £6,189 | 0 |
| **Generation** | | | | |
| Connection of a single Small Scale Embedded | £132 | N/A | | |
| Connection of other generation up to 20kVA not covered by the above at LV | £514 | | 0 | £514 |
| Connection of other generation greater than 20kVA and up to 50kVA at LV | £1,028 | | 0 | £1,028 |
| Connection of other generation greater than 50kVA at LV | £1,387 | | 0 | £1,387 |
| Connection of generation up to 250kVA at HV | £1,685 | | 0 | £1,685 |
| Connection of generation greater than 250kVA and up to 1MVA at HV | £1,900 | | 0 | £1,900 |
| Connection of generation greater than 1MVA | £2,694 | | 0 | £2,694 |
| Connection of generation up to 10MVA at EHV and at 132kV | £5,139 | | £5,139 | 0 |
| Connection of generation greater than 10MVA and up to 50MVA at EHV and at | £5,543 | | £5,543 | 0 |
| Connection of generation greater than 50MVA | £7,426 | | £7,426 | 0 |
| A Refer to 7.6 above for detailed definition.<br>B Refer to 7.6 above, Small Project Demand Connection (a) for detailed definition.<br>C Refer to 7.6 above, Small Project Demand Connection (b) for detailed | | | | |

Note 1: “LV”, “HV”, or “EHV” in the table above denotes the highest voltage of works including any associated Reinforcement or diversionary works. For the avoidance of doubt the voltage will be categorised in line with Ofgem’s guidance on categorisation for Guaranteed Standards of Performance, e.g. installing a new 11kV circuit breaker at a 132/11kV or 33/11kV substation will be categorised as EHV.

Note 2: “Small Scale Embedded Generator” as defined in 2.29

## D CIC Assessment and Design of the Non-Contestable Work

7.17 For applications received in accordance with Section 3 of this Statement, our charges associated with the identification of the most appropriate point on the existing Distribution System for connection of the Extension Assets and the design of any Reinforcement and processing the application are set out in the table below. We may levy additional assessment and design charges where the work undertaken exceeds the costs included in the minimum charge or requires assessing the impact of the connection on the transmission system. The charges are standard charges based on the size and type of the connection and the highest voltage of assets installed including any associated Reinforcement or diversionary works. The table shows the amount of the charge that is payable in relation to the provision of our connection offer, and the amount of the charge that is payable in relation to your acceptance of our connection offer. Further information about the timing of these charges and the circumstances where each applies may be provided elsewhere in this document:-

| **Category** | **Minimum Charge £** | **Additional Charge** | **Timing of Charge** | |
|---|---|---|---|---|
| | | | **Connection Offer** | **Acceptance** |
| **Demand** | | | | |
| Single LV Service Demand Connection[A] | £118 | N/A | | |
| 2 to 4 services single phase LV, no extension to LV | £191 | N/A | | |
| 1-4 Premises, single phase LV, extension to the LV | £265 | N/A | | |
| 1 three phase LV service with whole current metering to a single Premises[D] | £118 | N/A | | |
| Other LV connection(s) with a total load up to | £412 | | 0 | £412 |
| Other LV connection(s) with a total load greater than 100kVA and up to 250kVA LV not covered by the | £533 | | 0 | £533 |
| Connection greater than 250kVA and up to 1MVA | £619 | | 0 | £619 |
| Connection up to 250kVA at HV | £825 | | 0 | £825 |
| Connection greater than 250kVA and up to 1MVA | £825 | | 0 | £825 |
| Connection greater than 1MVA and up to 3MVA at | £1,286 | | 0 | £1,286 |

| | | | | |
|---|---|---|---|---|
| Connection greater than 3MVA and up to 10MVA at | £1,717 | | 0 | £1,717 |
| Connection up to 10MVA at EHV and at 132kV | £2,852 | | £2,852 | 0 |
| Connection greater than 10MVA and up to 50MVA | £3,256 | | £3,256 | 0 |
| Connection greater than 50MVA | £4,924 | | £4,924 | 0 |
| **Generation** | | | | |
| Connection of a single Small Scale Embedded | £132 | N/A | | |
| Connection of other generation up to 20kVA not covered by the above at LV | £520 | | 0 | £520 |
| Connection of other generation greater than 20kVA and up to 50kVA at LV | £915 | | 0 | £915 |
| Connection of other generation greater than 50kVA | £1,248 | | 0 | £1,248 |
| Connection of generation up to 250kVA at HV | £1,593 | | 0 | £1,593 |
| Connection of generation greater than 250kVA and up to 1 MVA at HV | £1,605 | | 0 | £1,605 |
| Connection of generation greater than 1MVA at HV | £1,866 | | 0 | £1,866 |
| Connection of generation up to 10MVA at EHV and 132kV | £4,090 | | £4,090 | 0 |
| Connection of generation greater than 10MVA and up to 50MVA at EHV and at 132kV | £4,736 | | £4,736 | 0 |
| Connection of generation greater than 50MVA | £6,619 | | £6,619 | 0 |
| A Refer to 7.6 above for detailed definition.<br>B Refer to 7.6 above, Small Project Demand Connection (a) for detailed definition.<br>C Refer to 7.6 above, Small Project Demand Connection (b) for detailed definition.<br>D Refer to 7.6 above, Small Project Demand Connection (c) for detailed definition. | | | | |

Note 1: “LV”, “HV”, or “EHV” in the table above denotes the highest voltage of works including any associated Reinforcement or diversionary works. For the avoidance of doubt the voltage will be categorised in line with Ofgem’s guidance on categorisation for Guaranteed Standards of Performance, e.g. installing a new 11kV circuit breaker at a 132/11kV or 33/11kV substation will be categorised as EHV.

Note 2: “Small Scale Embedded Generator” as defined in 2.29

# E CIC Design Approval of the Contestable Work

7.18 For application received in accordance with Section 3 of this Statement, our charges associated with the approval of an Extension Asset design produced by an ICP are set out in the Table below:-

| Category | Charge £ | Additional Charge £ |
|---|---|---|
| **Demand** | | |
| Single LV Service Demand Connection[A] | £74 | N/A |
| 2 to 4 services single phase LV, no extension to LV network[B] | £74 | N/A |
| 1-4 Premises, single phase LV, extension to the LV network[C] required | £147 | N/A |
| 1 three phase LV service with whole current metering to a single Premises[D] | £74 | N/A |
| Other LV connection(s) with a total load up to 100kVA LV | £172 | |
| Other LV connection(s) with a total load greater than 100kVA and up to 250kVA LV not covered by the above | £258 | |
| Connection greater than 250kVA and up to 1MVA at LV | £344 | |
| Connection up to 250kVA at HV | £498 | |
| Connection greater than 250kVA and up to 1MVA at HV | £498 | |
| Connection greater than 1MVA and up to 3MVA at HV | £670 | |
| Connection greater than 3MVA and up to 10MVA at HV | £860 | |
| Connection up to 10MVA at EHV | £1,427 | |
| Connection greater than 10MVA and up to 50MVA | £2,099 | |
| Connection greater than 50MVA | £2,502 | |
| **Generation** | | |
| Connection of a single Small Scale Embedded Generator | £147 | N/A |
| Connection of other generation at LV up to 20kVA not covered by the above | £344 | |

| | | |
|---|---|---|
| Connection of other generation greater than 20kVA and up to 50kVA at LV | £344 | |
| Connection of other generation greater than 50kVA at LV | £459 | |
| Connection of generation up to 250kVA at HV | £459 | |
| Connection of generation greater than 250kVA and up to 1MVA at HV | £554 | |
| Connection of generation greater than 1MVA at HV | £794 | |
| Connection of generation up to 10MVA at EHV and at 132kV | £1,801 | |
| Connection of generation greater than 10MVA and up to 50MVA at EHV and at 132kV | £2,099 | |
| Connection of generation greater than 50MVA | £2,906 | |
| A Refer to 7.6 above for detailed definition.<br>B Refer to 7.6 above, Small Project Demand Connection (a) for detailed definition.<br>C Refer to 7.6 above, Small Project Demand Connection (b) for detailed definition.<br>D Refer to 7.6 above, Small Project Demand Connection (c) for detailed definition. | | |

Note 1: "LV", "HV", or "EHV" in the table above denotes the highest voltage of works including any associated Reinforcement or diversionary works. For the avoidance of doubt the voltage will be categorised in line with Ofgem's guidance on categorisation for Guaranteed Standards of Performance, e.g. installing a new 11kV circuit breaker at a 132/11kV or 33/11kV substation will be categorised as EHV.

Note 2: "Small Scale Embedded Generator" as defined in 2.29

# F Construction

## F1 Connections covered by Quotation Accuracy Scheme

7.19 Our charges associated with the construction of small connections (as defined in 7.6) are set out below:-

7.20 Please note that you will also need to include charges for Assessment and Design, if any, as outlined in paragraph 7.15.

7.21 These charges are covered by the Quotation Accuracy Scheme outlined under paragraphs 7.7 to 7.11 of this Section.

7.22 Charges in the tables below include:

- Both the Contestable Work and Non-Contestable Work, however these will be identified as separate elements within your Connection Offer
- Liaison with the highways authorities, submitting street works notices and/or permit applications
- Providing and setting out signing, lighting and guarding

7.23 The minimum and maximum values of charges shown in the following tables are designed to provide you with an indication of the range of charges that would normally apply to a particular activity and therefore not absolute limits on the minimum and maximum value of charge that may be levied.

7.24 Additional costs sometimes need to be included within your quotation to meet your specific connection requirements and these are excluded from the min/max range of potential connection charges set out below. Where additional costs have been included we will provide an explanation. Examples of these additional costs can include, but are not limited to:

- Easements, wayleaves or land transfers if required, as detailed in Table I, Land Rights
- Traffic management costs, e.g. temporary traffic lights and road closures
- Lane rental charges and permit costs imposed by local authorities
- Works outside of normal business hours (including weekends, bank holidays and night working)
- Shutdowns to isolate existing sections of network to enable the works to be carried out safely, when required
- Cable routes with engineering difficulties, e.g. river and rail crossings
- Same day reinstatement of excavated grounds, where requested by yourselves or the Local Authority

7.25 What factors influence the cost:

- The size and length of cable we are required to install to facilitate your required load
- The location of the point of connection onto our existing network
- The type of footpath we are required to excavate and reinstate, e.g. a tarmac footpath would be cheaper to excavate and reinstate than a footpath made up with paving slabs which may need to be temporarily removed from site for the duration of the works
- The type of carriageway we are required to excavate and reinstate, e.g. a cul-de-sac could be cheaper to excavate and reinstate than a main road passing through a city centre

- Charges levied by third parties in association with a connection, e.g. fees requested by the Local Authority for road closure applications

7.26 How you can minimise the connection cost:

- You can carry out any excavation works required within your own land ownership boundary. We will specify the requirements such as trench depths/widths and the type of ducting to be utilised, where required.
- Ask your nominated electrician to calculate your load requirements, allowing for diversity. This will ensure you do not request a connection larger than you need.
- Consider your proposed service termination location. The greater the distance between the existing network and your required termination, the greater the connection cost could be. If you are unsure of where the existing network is located in regards to your property, please request network plans for the area.

7.27 Further information can be found on our website at www.westernpower.co.uk/connections

**Range of potential charges for underground connection works**

| **Area** | | | **West Midlands** | |
|---|---|---|---|---|
| **Activity** | **Surface Type/Engineering Task** | **Unit** | **Min** | **Max** |
| **Single phase underground service;** Inclusive of connecting new service cable onto the mains and termination of the service cable. Where surface types are specified, the cost is inclusive of excavation and reinstatement of a joint hole to expose the existing cable.<br><br>Costs are exclusive of cable installation – Please refer to 'Cable Installation' section below for cable provision, installation and trenching costs. | Typical footpath | # | 880 | 1,605 |
| | Typical unmade ground / grass verge | # | 700 | 1,396 |
| | Typical carriageway | # | 1,040 | 2,590 |
| | Service connection requiring no excavation by DNO* | # | 506 | 862 |

| | | | | |
|---|---|---|---|---|
| **Three phase underground service (up to 69kVA);** Inclusive of connecting new service cable onto the mains and termination of the service cable. Where surface types are specified, the cost is inclusive of excavation and reinstatement of a joint hole to expose the existing cable.<br><br>Costs are exclusive of cable installation – Please refer to 'Cable Installation' section below for cable provision, installation and trenching costs. | Typical footpath | # | 912 | 1,605 |
| | Typical unmade ground / grass verge | # | 737 | 1,396 |
| | Typical carriageway | # | 1,066 | 2,590 |
| | Service connection requiring no excavation by DNO* | # | 550 | 862 |
| **Low voltage underground mains cable extension;** Inclusive of connecting a new mains cable onto the existing mains cable and terminating to a bottle end. Where surface types are specified, the cost is inclusive of excavation and reinstatement of a joint hole to expose the existing cable.<br><br>Costs are exclusive of cable installation – Please refer to 'Cable Installation' section below for cable provision, installation and trenching costs. | Typical footpath | # | 1,422 | 2,029 |
| | Typical unmade ground/grass verge | # | 1,100 | 1,819 |
| | Typical carriageway | # | 1,550 | 3,013 |
| | Mains extension requiring no excavation by DNO* | # | 895 | 1,286 |
| **Cable Installation;** For trench works beyond the joint hole, inclusive of the provision and installation of cable. Where surface types are specified, the cost is inclusive of ground excavation and reinstatement. | Typical footpath | m | 92 | 154 |
| | Typical unmade ground/grass verge | m | 27 | 92 |
| | Typical carriageway | m | 117 | 605 |
| | Cable installation requiring no excavation by DNO* | m | 4 | 55 |

** In some circumstances, sections of excavation works will not necessarily need to be carried out by the DNO. This can include excavation within your own land ownership boundary which you can arrange to carry out yourself.*

**Range of potential charges for overhead connection works**

| Area | | | West Midlands | |
|---|---|---|---|---|
| **Activity** | **Surface Type/ Engineering Task** | **Unit** | **Min** | **Max** |
| **Aerial service connection;**<br>New overhead connection with pole termination, up to 10 metres of overhead cable and termination of the service cable.<br>No costs are included for any replacement or additional poles. | Single phase | # | 362 | 1,076 |
| | Three phase | # | 513 | 1,076 |
| **Overhead to underground service connection;**<br>New underground service with termination to a pole, including up to 10 metres of cable up the pole and termination of the service cable. No costs are included for any replacement or additional poles.<br><br>Costs are exclusive of underground cable installation – Please refer to 'Cable Installation' section above for underground cable provision, installation and trenching costs. | Single phase | # | 286 | 859 |
| | Three phase | # | 409 | 859 |
| **Low Voltage overhead mains cable extension;**<br>Inclusive of connecting a new span of three phase low voltage overhead line, a single new pole and stay wire. | Single span overhead mains extension | # | 3,634 | 5,683 |
| **Overhead to underground low voltage mains cable extension;**<br>Inclusive of connecting a new three phase low voltage mains cable to a pole, including up to 10 metres of cable up the pole and termination of the service cable. No costs are included for any replacement or additional poles.<br><br>Costs are exclusive of underground cable installation – Please refer to 'Cable Installation' section above for underground cable provision, installation and trenching costs. | Underground to overhead point of connection mains extension | # | 1,461 | 1,578 |

## F2 Service Alterations

7.28 Our charges associated with changes of service positions for single services (as defined in 7.6) are set out below.

7.29 Please note that you will need to include charges for Assessment and Design, if any, as outlined in paragraph 7.15.

7.30 These charges are covered by the Quotation Accuracy Scheme outlined under paragraphs 7.7 to 7.11 of this Section.

7.31 Charges in the tables below include:

- Both the Contestable Work and Non-Contestable Work, however these will be identified as separate elements within your Connection offer
- Liaison with the highways authorities, submitting street works notices and / or permit applications
- Providing and setting out signing, lighting and guarding

7.32 The minimum and maximum values of charges shown in the following tables are designed to provide you with an indication of the range of charges that would normally apply to a particular activity and are therefore not absolute limits on the minimum nor the maximum value of charge that may be levied.

7.33 Additional costs sometimes need to be included within your quotation to meet your specific connection requirements and these are excluded from the min/max range of potential service alteration charges set out below. Where additional costs have been included we will provide an explanation. Examples of these additional costs can include, but are not limited to:

- Easements, wayleaves or land transfers, if required, as detailed in Table I, Land Rights
- Traffic management costs, e.g. temporary traffic lights and road closures
- Lane rental charges and permit costs imposed by local authorities
- Works outside of normal business hours (including weekends, bank holidays and night working)
- Shutdowns to isolate existing sections of network to enable the works to be carried out safely, if required
- Cable routes with engineering difficulties, e.g. river and rail crossings
- Same day reinstatement of excavated grounds, where requested by yourself or the Local Authority

7.34 What factors influence the cost:

- The size and length of cable we are required to install to facilitate your required load
- The location of the point of connection onto our existing network
- The type of footpath we are required to excavate and reinstate, e.g. a tarmac footpath could be cheaper to excavate and reinstate than a footpath made up with paving slabs which may need to be temporarily removed from site for the duration of the works
- The type of carriageway we are required to excavate and reinstate, e.g. a cul-de-sac could be cheaper to excavate and reinstate than a main road passing through a city centre
- Charges levied by third parties in association with a service alteration, e.g. fees requested by the Local Authority for road closure applications

7.35 How you can minimise the service alteration cost:

- You can carry out any excavation works required within your own land ownership boundary. We will specify the requirements such as trench depths / widths and the type of ducting to be utilised, where required.
- Consider your proposed new service termination location. The greater the distance between the existing network and your required new termination position, the greater the service alteration cost could be.

7.36 Further information can be found on our website: www.westernpower.co.uk/connections

**Range of potential charges for underground service alteration works**

| **Area** | | | **West Midlands** | |
|---|---|---|---|---|
| **Activity** | **Surface Type / Engineering Task** | **Unit** | **Min** | **Max** |
| **Single phase underground service alteration;** Inclusive of connecting new service cable onto the existing service cable and termination. Where surface types are specified, the cost is inclusive of excavation and reinstatement of a joint hole to expose the existing service cable.<br><br>Costs are exclusive of cable installation – Please refer to 'Cable Installation' section below for underground cable provision, installation and trenching costs. | Typical footpath | # | 591 | 1,292 |
| | Typical unmade ground / grass verge | # | 456 | 737 |
| | Typical carriageway | # | 712 | 1,435 |
| | Service alteration requiring no excavation by the DNO* | # | 310 | 751 |
| **Three phase underground service alteration (up to 69kVA);** Inclusive of connecting new service cable onto the existing service cable and termination. Where surface types are specified, the cost is inclusive of excavation and reinstatement of a joint hole to expose the existing service cable.<br><br>Costs are exclusive of underground cable installation – please refer to 'Cable Installation' section below for underground cable provision, installation and trenching costs | Typical footpath | # | 692 | 1,141 |
| | Typical unmade ground / grass verge | # | 556 | 2,005 |
| | Typical carriageway | # | 813 | 2,936 |
| | Service alteration requiring no excavation by the DNO* | # | 411 | 1,589 |

| Area | | | West Midlands | |
|---|---|---|---|---|
| **Activity** | **Surface Type / Engineering Task** | **Unit** | **Min** | **Max** |
| **Overhead service alteration;**<br>Including removal of existing service, connection of replacement service with up to 10 metres of overhead cable and termination of the service. Assumes no additional pole required. | Single phase | # | 737 | 1,317 |
| | Three phase | # | 1,153 | 1,568 |
| **Overhead to underground service alteration;**<br>Including removal of the existing overhead service and installation of new underground service with connection to a pole, up to 10 metres of cable up the pole and termination of the service cable. No costs are included for any replacement or additional poles.<br><br>Costs are exclusive of underground cable installation – Please refer to 'Cable Installation' section below for underground cable provision, installation and trenching. | Single phase | # | 699 | 948 |
| | Three phase | # | 839 | 1,335 |
| **Cable installation;**<br>For trench works beyond the joint hole or pole termination, inclusive of the provision and installation of cable. Including excavation and reinstatement of a trench in a typical surface type, unless specified as requiring no excavation by the DNO. | Typical footpath | m | 93 | 140 |
| | Typical unmade ground / grass verge | m | 28 | 84 |
| | Typical carriageway | m | 118 | 550 |
| | Cable installation requiring no excavation by DNO* | m | 5 | 50 |

** In some circumstances, sections of excavation works will not necessarily need to be carried out by the DNO. This can include excavation within your own land ownership boundary which you can arrange to carry out yourself.*

**F3 Other LV Services not covered by the QAS**

7.37 Our charges associated with construction of services to the Entry/ Exit Point that are not covered by the Quotation Accuracy Scheme are given in Table below. These charges are for the connection of the service cable only.

7.38 Charges below cover both the Contestable and Non-Contestable Work, however these will be identified separately on your Connection Offer/ POC Offer. Note that your Connection Offer will also include charges for Assessment and Design as outlined in paragraph 7.15 and may include other charges.

7.39 The charges in the table below are inclusive of liaison with highway authorities, sending street works notices and signing, lighting and guarding. These charges exclude traffic management costs, e.g. temporary traffic lights, road closures etc and Traffic Management Act costs. Where these additional charges are relevant, these will be included in your connection charge.

7.40 These charges exclude charges for any easement, wayleaves or land transfers that are required and these are detailed in Table I, Land Rights.

| | | **Area** | **West Midlands** | |
|---|---|---|---|---|
| **Activity** | **Description** | **Unit** | **Min** | **Max** |
| Single phase service, up to 100A 18kVA | One single phase service, from a passing or extended main, including service cable, mains service joint, and termination. Service cable length up to 5 metres per service. Duct installation, excavation and backfill joint hole undertaken by third party. | # | 514 | 897 |
| | Multiple single phase services, from an extended main, including service cable, mains service joints, and termination. Service cable length up to 5 metres per service. Duct installation, excavation and backfill joint hole undertaken by third party. | # | 864 | 1,671 |
| | Excavation and backfill of joint hole | # | 214 | 821 |
| | Additional metres of service cable | m | 10 | 14 |
| Three phase service up to 100A per phase 69kVA | A single three phase service, from a passing main, including service cable, mains service joint, and termination. Service cable length up to 5 metres per service. Duct installation, excavation and backfill joint hole undertaken by third party. | # | 543 | 855 |
| | Excavation and backfill of joint hole | # | 214 | 821 |
| | Additional metres of three phase service cable | m | 13 | 17 |
| Three phase service up to 200A per phase 140kVA | A single three phase service, from a passing main, including service cable, mains service joint, and termination. Service cable length up to 5 metres per service. Duct installation, excavation and backfill joint hole undertaken by third party. | # | 2,152 | 2,942 |

| | | | | |
|---|---|---|---|---|
| | Excavation and backfill of joint hole | # | 245 | 821 |
| | Additional metres of three phase service cable | m | 22 | 45 |
| Three phase service up to 300A per phase 208kVA | A single three phase service, from a passing main, including service cable, mains service joint, and termination. Service cable length up to 5 metres per service. Duct installation, excavation and backfill joint hole undertaken by third party. | # | 2,153 | 2,771 |
| | Excavation and backfill of joint hole | # | 245 | 821 |
| | Additional metres of three phase service cable | m | 35 | 45 |
| Three phase service up to 300A per phase 240kVA | A single three phase service, from a passing main, including service cable, mains service joint, and termination. Service cable length up to 5 metres per service. Duct installation, excavation and backfill joint hole undertaken by third party. | # | 2,153 | 2,771 |
| | Excavation and backfill of joint hole | # | 245 | 821 |
| | Additional metres of three phase service cable | m | 35 | 45 |
| Three phase service over 240kVA | A single three phase service, from a suitable source, including mains or service cable terminations in heavy duty cut-out. Service cable length up to 5 metres per service. Duct installation, excavation and backfill joint hole undertaken by third party. | # | 2,153 | 3,244 |
| | Excavation and backfill of joint hole | | 245 | 821 |
| | Additional metres of three phase service cable | m | 35 | 45 |
| Services to Multi-occupied Premises | Installation of a multi-way cut-out up to 10 way from a passing or extended main, including cables for adjacent communal metering, mains service joint, and termination. Service cable length up to 5 metres per service. Duct installation, excavation and backfill joint hole undertaken by third party. | # | 1,184 | 2,199 |
| | Installation of a multi-way cut-out of greater than 10 way from a passing or extended main, including cables for adjacent communal metering, mains service joint, and termination. Service cable length up to 5 metres per service. Duct installation, excavation and backfill joint hole undertaken by third party. | # | 1,937 | 3,184 |
| | Installation of rising mains and laterals excluding civils and containment work. | M | 43 | 71 |
| | Excavation and backfill of joint hole | # | 245 | 821 |

| | | | | |
|---|---|---|---|---|
| | Additional metres of three phase service cable | m | 35 | 45 |

Note 1: Reinstatement costs for cobbles, granite setts, large flag stones etc. will be higher and will be reflected in the Connection Charge

## F4 Unmetered Supplies

7.41 Our charges associated with construction activities in respect of unmetered supplies.

7.42 Charges below cover both the Contestable and Non-Contestable Work, however these will be identified separately on your Connection Offer/ POC Offer. Note that your Connection Offer will also include charges for Assessment and Design as outlined in paragraph 7.15 and may include other charges.

7.43 The charges in the table below are inclusive of liaison with highway authorities, sending street works notices and signing, lighting and guarding. These charges exclude traffic management costs, e.g. temporary traffic lights, road closures etc and Traffic Management Act costs. Where these additional charges are relevant, these will be included in your connection charge.

7.44 These charges exclude charges for any easement, wayleaves or land transfers that are required and these are detailed in Table I, Land Rights.

| **Area** | | | **West Midlands** | |
|---|---|---|---|---|
| Activity | Description | Unit | Min | Max |
| Unmetered Supplies | New connection up to 5 metres excluding excavation and reinstatement | # | 405 | 767 |
| | Disconnection excluding excavation and reinstatement | # | 201 | 296 |
| | Transfer or reconnection up to 5 metres excluding excavation and reinstatement | # | 327 | 414 |
| | Additional metres of services cable excluding excavation and reinstatement | m | 11 | 18 |

| | | Area | West Midlands | |
|---|---|---|---|---|
| Activity | Description | Unit | Min | Max |
| Unmetered Supplies | New connection up to 5 metres on same side of road including excavation and reinstatement | # | 634 | 2,649 |
| | New connection up to 10 metres on other side of road including excavation and reinstatement | # | 627 | 3,707 |
| | Disconnection including excavation and reinstatement | # | 405 | 1,096 |
| | Transfer or reconnection up to 5 metres including excavation and reinstatement | # | 566 | 1,782 |
| | Additional metres of services cable including excavation and reinstatement | m | 40 | 132 |
| | Rent-a-Jointer team (excluding materials) | Day | #N/A | #N/A |
| | Administrative charge for ICP work | # | #N/A | #N/A |

Note 1: These charges exclude special reinstatement requirements, for example cobbles, granite setts, large flag stones etc.

## F5 Mains Cables

7.45 Our charges associated with cables are set out in the table below:-

7.46 Charges below cover both the Contestable and Non-Contestable Work, however these will be identified separately on your Connection Offer/ POC Offer. Note that your Connection Offer will also include charges for Assessment and Design as outlined in paragraph 7.15 and may include other charges.

7.47 The charges in the table below are inclusive of liaison with highway authorities, sending street works notices and signing, lighting and guarding. These charges exclude traffic management costs, e.g. temporary traffic lights, road closures etc and Traffic Management Act costs. Where these additional charges are relevant, these will be included in your connection charge.

7.48 These charges exclude charges for any easement, wayleaves or land transfers that are required and these are detailed in Table I, Land Rights.

7.49 Where the cable charges are associated with the connection there will be an additional charge for the Final Connection to our existing Distribution System and these charges are identified in 7.59.

| | | Area | West Midlands | |
|---|---|---|---|---|
| Activity | Description | Unit | Min | Max |
| Extension of LV mains cable of 95mm² or less | Lay 10m cable or less including jointing onto existing main in prepared trench or pulling through duct installed by others. All backfill and reinstatement by others. | # | 547 | 904 |
| | Additional metres of mains cable | M | 14 | 25 |
| | Lay 10m cable or less in typical* footpath or carriageway, including excavation and reinstate to match the existing surface | # | 2,303 | 7,062 |
| | Additional metres of mains cable | M | 95 | 293 |
| | Lay 10m cable or less in unmade ground, including excavation and reinstate to match the existing surface | # | 1,188 | 2,116 |
| | Additional metres of mains cable | M | 30 | 57 |
| Extension of LV mains cable of between 95mm² and 185mm² | Lay 10m cable or less in prepared trench or pulling through duct installed by others. All backfill and reinstatement by others including jointing onto existing main. | # | 772 | 1,145 |
| | Additional metres of mains cable | M | 22 | 39 |
| | Lay 10m cable or less in typical* footpath or carriageway, including excavation and reinstate to match the existing surface | # | 2,777 | 7,201 |
| | Additional metres of mains cable | M | 108 | 307 |
| | Lay 10m cable or less in unmade ground, including excavation and reinstate to match the existing surface | # | 1,435 | 2,255 |
| | Additional metres of mains cable | M | 45 | 71 |
| Extension of LV mains cable of greater than 185mm² | Lay 10m cable or less in prepared trench or pulling through duct installed by others. All backfill and reinstatement by others including jointing onto existing main. | # | 1,095 | 1,567 |
| | Additional metres of mains cable | M | 37 | 49 |

| | | | | |
|---|---|---|---|---|
| | Lay 10m cable or less in typical* footpath or carriageway, including excavation and reinstate to match the existing surface | # | 3,101 | 7,400 |
| | Additional metres of mains cable | M | 126 | 313 |
| | Lay 10m cable or less in unmade ground, including excavation and reinstate to match the existing surface | # | 1,759 | 2,455 |
| | Additional metres of mains cable | M | 58 | 77 |
| Extension of HV mains cable | Lay 20m cable or less in prepared trench or pulling through duct installed by others. All backfill and reinstatement by others including jointing onto existing main. | # | 2,077 | 4,978 |
| | Additional metres of mains cable | M | 27 | 54 |
| | Lay 20m cable or less in typical* footpath or carriageway, including excavation and reinstate to match the existing surface | # | 4,766 | 13,030 |
| | Additional metres of mains cable | M | 93 | 304 |
| | Lay 20m cable or less in unmade ground, including excavation and reinstate to match the existing surface | # | 2,927 | 4,277 |
| | Additional metres of mains cable | M | 56 | 80 |
| Extension of 33kV mains cable | Lay 30m cable or less in prepared trench or pulling through duct installed by others. All backfill and reinstatement by others including jointing onto existing main. | # | 4,742 | 10,012 |
| | Additional metres of mains cable | M | 89 | 255 |
| | Lay 30m cable or less in typical* footpath or carriageway, including excavation and reinstate to match the existing surface | # | 7,484 | 23,091 |
| | Additional metres of mains cable | M | 181 | 691 |
| | Lay 30m cable or less in unmade ground, including excavation and reinstate to match the existing surface | # | 5,691 | 11,131 |
| | Additional metres of mains cable | M | 121 | 293 |
| Extension of 66kV mains cable | Lay 30m cable or less in prepared trench or pulling through duct installed by others. All backfill and reinstatement by others including jointing onto existing main. | # | 5,690 | 12,014 |
| | Additional metres of mains cable | M | 107 | 306 |

| | | | | |
|---|---|---|---|---|
| | Lay 30m cable or less in typical* footpath or carriageway, including excavation and reinstate to match the existing surface | # | 8,981 | 27,709 |
| | Additional metres of mains cable | M | 217 | 829 |
| | Lay 30m cable or less in unmade ground, including excavation and reinstate to match the existing surface | # | 6,829 | 13,357 |
| | Additional metres of mains cable | M | 145 | 352 |
| Extension of 132kV mains cable | Lay 40m cable or less in prepared trench or pulling through duct installed by others. All backfill and reinstatement by others including jointing onto existing main. | # | #N/A | #N/A |
| | Additional metres of mains cable | M | #N/A | #N/A |
| | Lay 40m cable or less in typical* footpath or carriageway, including excavation and reinstate to match the existing surface | # | 95,000 | 100,000 |
| | Additional metres of mains cable | M | 2,375 | 2,500 |
| | Lay 40m cable or less in unmade ground, including excavation and reinstate to match the existing surface | # | 85,000 | 90,000 |
| | Additional metres of mains cable | M | 2,125 | 2,250 |

* These charges exclude special reinstatement requirements for example cobbles, granite setts, large flag stones etc

**F6 Overhead Lines**

7.50 Our charges associated with overhead lines are set out in the table below:-

7.51 Charges below cover both the Contestable and Non-Contestable Work, however these will be identified separately on your Connection Offer/ POC Offer. Note that your Connection Offer will also include charges for Assessment and Design as outlined in paragraph 7.15 and may include other charges.

7.52 The charges in the table below are inclusive of liaison with highway authorities, sending street works notices and signing, lighting and guarding. These charges exclude traffic management costs, e.g. temporary traffic lights, road closures etc and Traffic Management Act costs. Where these additional charges are relevant, these will be included in your connection charge.

7.53 These charges exclude charges for any easement, wayleaves or land transfers that are required and these are detailed in Table I, Land Rights.

7.54 Where the overhead line charges are associated with the connection there will be an additional charge for the Final Connection to our existing Distribution System and these charges are identified in 7.59.

| | | Area | West Midlands | |
|---|---|---|---|---|
| Activity | Description | Unit | Min | Max |
| Extension of L:V overhead lines | Erect a single span LV overhead line including termination pole (typical span length 50m) | # | 3,122 | 4,881 |
| | Erect additional span LV overhead line (typical span length 50m) | # | 2,584 | 4,299 |
| Extension of HV overhead lines | Erect a single span HV overhead line including termination pole (typical span length 90m) | # | 3,617 | 11,441 |
| | Erect additional span HV overhead line (typical span length 90 m) | # | 4,381 | 10,496 |
| Extension of 33kV overhead lines | Erect a single span 33kV overhead line including termination pole (typical span length 110m) | # | 12,446 | 15,525 |
| | Erect additional span 33kV overhead line (typical span length 110m) | # | 9,423 | 12,312 |
| Extension of 66kV overhead lines | Erect a single span 66kV overhead line including termination pole (typical span length 110m) | # | 14,935 | 18,630 |
| | Erect additional span 66kV overhead line (typical span length 110m) | # | 11,308 | 14,774 |
| Extension of 132kV overhead lines | Erect a single span 132kV overhead line including termination pole (typical span length 130m) | # | 19,000 | 24,000 |
| | Erect additional span 132kV overhead line (typical span length 130m) | # | 14,000 | 19,000 |

### F7 Substations

7.55 Our charges associated with substations are set out in the table below:-

7.56 Charges below cover both the Contestable and Non-Contestable Work, however these will be identified separately on your Connection Offer/ POC Offer. Note that your Connection Offer will also include charges for Assessment and Design as outlined in paragraph 7.15 and may include other charges.

7.57 The charges in the table below are inclusive of liaison with highway authorities, sending street works notices and signing, lighting and guarding. These charges exclude traffic management costs, e.g. temporary traffic lights, road closures etc and Traffic Management Act costs. Where these additional charges are relevant, these will be included in your connection charge.

7.58 These charges exclude charges for any easement, wayleaves or land transfers that are required and these are detailed in Table I, Land Rights

| | | Area | West Midlands | |
|---|---|---|---|---|
| Activity | Description | Unit | Min | Max |
| HV/ LV substation pole or pad mounted transformer | Install pole mounted transformer up to 100kVA including pole & stays | # | 7,127 | 26,895 |
| | Install pole mounted transformer greater than 100kVA including pole & stays | # | 14,409 | 33,342 |
| | Install a pad mounted transformer | # | 13,119 | 24,711 |
| | Transformer change | # | 5,327 | 25,897 |
| HV/ LV substation ground mounted transformer | Install ground mounted transformer up to and including 315kVA including RMU and LV fuse board or circuit breaker. | # | 33,427 | 58,754 |
| | Install ground mounted transformer greater than 315kVA and up to and including 500kVA including RMU and LV fuse board/ cabinet or circuit breaker. | # | 33,427 | 58,754 |
| | Install ground mounted transformer greater than 500kVA and up to and including 800kVA including RMU and LV fuse board/ cabinet or circuit breaker. | # | 43,307 | 59,738 |
| | Install ground mounted transformer greater than 800kVA and up to 1000kVA including RMU and LV fuse board/ cabinet or circuit breaker. | # | 45,947 | 62,091 |
| | Install ground mounted transformer greater than 1000kVA including RMU and LV fuse board/ cabinet or circuit breaker. | # | #N/A | #N/A |
| | Transformer change | # | 14,023 | 48,361 |
| HV only substation (customer owned HV/LV transformer) | Install an internal hv switchgear (e.g. RMU) and metered circuit breaker. | # | 17,628 | 160,974 |
| | Install an external hv switchgear (e.g. RMU) and metered circuit breaker. | # | 22,229 | 36,086 |
| EHV/ HV primary substation | New indoor single transformer substation | # | 825,000 | 920,000 |
| | New indoor double transformer substation | # | 1,350,000 | 1,570,000 |
| | New outdoor single transformer substation | # | 825,000 | 915,000 |
| | New outdoor double transformer substation | # | 135,000 | 1,570,000 |

| | | | | |
|---|---|---|---|---|
| | Add an additional transformer at existing indoor substation | # | 615,000 | 740,000 |
| | Add an additional transformer at existing outdoor substation | # | 615,000 | 720,000 |
| | Change transformer | # | 380,000 | 400,000 |
| | Change HV switchgear | # | 310,000 | 315,000 |
| 132kV/ EHV substation | New indoor single transformer substation | # | 960,000 | 1,500,000 |
| | New indoor double transformer substation | # | 1,650,000 | 2,740,000 |
| | New outdoor single transformer substation | # | 960,000 | 1,500,000 |
| | New outdoor double transformer substation | # | 1,650,000 | 2,740,000 |
| | Add an additional transformer at existing indoor substation | # | 820,000 | 1,170,000 |
| | Add an additional transformer at existing outdoor substation | # | 820,000 | 1,170,000 |
| | Change transformer | # | 95,000 | 138,000 |
| | Change HV switchgear | # | 420,000 | 460,000 |

# G CIC Final Works and Phased Energisation

7.59 The charges set out in the table below set out the final connections to our network.

7.60 Charges below cover Non-Contestable Work or where we are asked to under-take live jointing on Contestable Assets, and will be identified separately on your Connection Offer. Note that your Connection Offer will also include charges for Assessment and Design as outlined in paragraph 7.15 and may include other charges.

7.61 These charges exclude charges for any easement, wayleaves or land transfers that are required and these are detailed in Table I, Land Rights.

7.62 The charges below are exclusive of all cable laying or substation installation costs and all joint hole excavation and reinstatement. These will have been covered by separate charges or have been carried out by your ICP.

| Area | | | West Midlands | |
|---|---|---|---|---|
| Activity | Description | Unit | Min | Max |
| Service Connections | Low voltage service joint to all sizes of low voltage main inclusive of service polarity and earth loop impedance test at the service position | # | 269 | 617 |

| | | | | |
|---|---|---|---|---|
| LV Mains Energisation | Low voltage mains Energisation of all sizes by a mains joint to an existing cable of any size | # | 384 | 706 |
| | Low voltage bottle end to mains cable, any size | # | 229 | 279 |
| | Low voltage mains Energisation of all sizes by terminating to an existing piece of low voltage switchgear, including all associated operating costs | # | 558 | 463 |
| | Low voltage mains Energisation of all sizes by connection to an overhead line | # | 1,003 | 1,003 |
| HV Mains Energisation | High voltage cable Energisation of all sizes by a joint to an existing cable of any size including all associated operational costs | # | 786 | 2,736 |
| | High voltage cable Energisation of all sizes by connection to an existing overhead line including all associated operational costs | # | 1,099 | 1,756 |
| | High voltage cable Energisation of all sizes by termination to an existing piece of switchgear including all associated operational costs | # | 1,233 | 1,692 |
| Operational work | LV operational work including for identification of cables requiring LV operations only | # | 274 | 515 |
| | LV commissioning work including switching to commission LV assets installed by ICPs | # | 274 | 435 |
| | HV operational work including for identification of cables requiring HV operations | # | 247 | 604 |
| | HV commissioning work including all operational work required to isolate network and commission HV assets installed and jointed by ICPs | # | 247 | 532 |

# H CIC Inspection and Monitoring of the Contestable Works

7.63 Any charges for Inspection and monitoring site visits will be made in accordance with WPD's policies and standards.. The frequency of inspection is set out in Section 6.

| Category | Unit | Charge |
|---|---|---|
| LV Network | per site visit | 206 |
| HV Network | per site visit | 206 |
| EHV Network | per site visit | 323 |
| 132kV Network | per site visit | 323 |

| | | |
|---|---|---|
| HV/ LV Substation | per site visit | 206 |
| EHV/ HV Substation | per site visit | 323 |
| HV/ LV Civils | per site visit | 206 |
| EHV/ HV Civils | per site visit | 323 |

# I Land Rights

7.64 Our charges associated with Land Rights are set out in the Table below. These charges excluded the cost of any compensation payable to third parties

7.65 Where your ICP chooses to negotiate Land Rights on our behalf the charges shown below will be reduced to cover our cost to process the documentation for forwarding to our solicitors.

| **Category** | **Charge** | |
|---|---|---|
| | **Min** | **Max** |
| Residential development substation site from developer (including easements from developer) | N/A | N/A |
| Commercial/industrial development substation site from developer (including easements from developer) | N/A | N/A |
| Residential/commercial/industrial development substation site from third party owner(s) (including easements from same third party owner(s)) | £550 | POA |
| Wayleave(s)/easement(s) only on a residential site from Developer | N/A | N/A |
| Wayleave(s)/easement(s) only on a commercial/Industrial site from Developer | N/A | N/A |
| Wayleave(s)/easement(s) from third party owner(s) | £69 | POA |
| Acquisition of Consents specifically associated with overhead lines e.g. Section 37 of the Electricity Act approval to erect overhead lines etc | £550.00 | POA |
| Survey associated with overhead lines e.g. determination of pole positions, tree clearance etc. | £550.00 | POA |
| Route marking prior to construction e.g. pegging of overhead line route and pole positions etc. | £275.00 | POA |
| Acquisition of specific Environmental Consents e.g. Conservation Area, Listed Buildings etc. | £550.00 | POA |
| Negotiations with individuals or organisations concerning nationally recommended compensation payments e.g. crop loss or land damage. This excludes any third party commercial compensation payment charges which will have to be negotiated separately by the Customer or their Agent. | £275.00 | POA |

## J Other

7.66 Our miscellaneous charges associated with the provision of the connection are set out in the Table below.

| Category | Charge |
|---|---|
| Negotiation of special terms | Price on application |
| Meetings not covered by other charges | Price on application |
| Abortive Visit | Price on application |
| Planning approval | Price on application |

7.67 The Operation and Maintenance Percentage referred to in 5.12 is given in Section 6.

# Section 8 – Glossary of Terms

| | |
|---|---|
| **Act** | the Electricity Act 1989 (as amended) |
| **Adoption Agreement** | is defined in paragraph 1.15 |
| **Affected Parties** | is defined in paragraph **Error! Reference source not found..** |
| **Application Date** | is defined in paragraph **Error! Reference source not found..** |
| **Bilateral Connection Agreement** | an agreement between us and another LDNO setting out the terms and conditions under which an embedded network shall be entitled to be and remain connected to the Distribution System |
| **Budget Estimate** | Is defined in paragraph 2.8 and 3.13 |
| **Business Day** | any day other than a Saturday, a Sunday, Christmas Day, Good Friday or a day which is a bank holiday within the meaning of the Banking and Financial Dealings Act 1971 and will be from 9:00am to 5:00pm (GMT or BST as applicable). |
| **Committed Network** | is defined in paragraph **Error! Reference source not found.** |
| **Competition in Connections (CIC)** | is defined in paragraph 1.7 |
| **CIC Charges** | are the charges detailed in parts D, E, G, H, I, and J of Section 7. |
| **Connection Agreement** | is defined in paragraphs 1.16 to 1.17 |
| **Connection Charge** | the payment to be made by the applicant to us for the provision of the connection. |
| **Connection Offer** | is defined in paragraph 1.13 |
| **Contestable Work** | is defined in paragraph 1.7 |
| **CUSC** | the Connection and Use of System Code which constitutes the contractual framework for connection to, and use of, the GB Transmission System. |
| **Customer** | the person requesting the connection. |
| **DCUSA** | the Distribution Connection and Use of System Agreement designated as such by the Authority under condition 22 of the Licence |
| **Dedicated Scheme** | Is defined in paragraph 5.32A |
| **De-energise** | to deliberately prevent the flow of electricity to or from an Exit/ Entry Point for any purpose other than a system outage on the our Distribution System (and cognate expressions shall be construed accordingly). |
| **Development Phase** | the five year period, unless otherwise agreed with us, commencing on the date of Energisation of an embedded network during which period the development is to be constructed. |
| **Disconnect** | means to permanently De-energise an Exit/ Entry Point by the removal of all or part of our equipment (and cognate expressions shall be construed accordingly. |
| **Distributed Generation Connections Guide** | The guide produced by us as required by our Licence which provides guidance on the connection process for distributed generation. |
| **Distribution Code** | is defined in paragraph 1.18. |
| **Distribution System** | the system (as defined in the Licence) consisting (wholly or mainly) of electric lines owned or operated by us and used for the distribution of electricity. |
| **ECCR** | the Electricity (Connection Charges) Regulations 2002 (SI 2002/93) as amended from time to time or the Electricity (Connection Charges) |

| | |
|---|---|
| | Regulations 2002 (SI 2017/106) as amended from time to time, as applicable |
| **ECCR Prescribed Period** | The relevant period from the date on which a connection is made as prescribed by the ECCR, being either (a) five years, for connections made prior 6 April 2017; or (b) ten years, for connections made on or after 6 April 2017. |
| **EHV** | more than 22kV but not more than 72kV |
| **Electric Lines** | means any line which is used for carrying electricity to or from an Exit/ Entry Point and includes, unless the context otherwise requires:<br>(a) any support for such line, that is to say, any structure, pole or other thing in, on, by or from which any such line is or may be supported, carried or suspended;<br>(b) any apparatus connected to such line for the purpose of carrying electricity; and<br>(c) any wire, cable, tube, pipe or other similar thing (including its casing or coating) which surrounds or supports, or is surrounded or supported by, or is installed in close proximity to, or is supported, carried or suspended in association with, any such line. |
| **Electric Plant** | means any plant, equipment, apparatus or appliance used for or for purposes connected with the distribution of electricity (including any metering equipment) other than an Electric Line. |
| **Energise** | to deliberately allow the flow of electricity to or from an Exit/ Entry Point where such a flow of electricity has never previously existed (and cognate expressions shall be construed accordingly). |
| **Enhanced Scheme** | is defined in paragraph 5.4 |
| **Entry/ Exit Point** | A point at which electricity, whether metered or unmetered, enter or exit our Distribution System. |
| **Existing Capacity** | is defined in paragraph 5.24 |
| **Existing Network** | is defined in paragraph **Error! Reference source not found.** |
| **Extension Assets** | are assets installed to connect a party or parties to the existing distribution network but which exclude Reinforcement assets. |
| **Fault Level** | the maximum prospective current or power that will flow into a short circuit at a point on the network, usually expressed in MVA or kA. |
| **Fault Level Contribution from Connection** | is defined in paragraph 5.24 |
| **Feasibility Study** | Is defined in paragraph 2.9 and 3.14. |
| **Flexible Connections** | are connection arrangements whereby a Customer's export or import of electricity is managed (often through real-time control) based upon contracted and agreed principles of available capacity. Flexible Connections typically allow quicker and cheaper connection to the Distribution System but are made on the basis that there is no limit on the extent to which a user's access can be interrupted. |
| **GB Transmission System** | the system consisting (wholly or mainly) of high voltage electric wires owned or operated by transmission licensees within Great Britain. |
| **Guaranteed Standards of Performance** | standards of service backed by a guarantee and set out in the Electricity (Standards or Performance) Regulations 2005 (as amended). |
| **HV** | more than 1kV but not more than 22kV |

| | |
|---|---|
| **Independent Connections Provider (ICP)** | a person with sufficient accreditation to carry out all or part of the Contestable Work. |
| **Interactive Connection Applications** | is defined in paragraph **Error! Reference source not found.** |
| **Interactive Connection Offers** | is defined in paragraph **Error! Reference source not found.** |
| **Interactive Queue** | is defined in paragraph **Error! Reference source not found.** |
| **Interruptions Incentive Scheme** | the scheme which provides incentives on us to deliver a good level of performance in respect of customer interruptions and customer minutes lost. |
| **Land Rights** | all such rights in, under or over Land as are necessary for the construction, installation, operation, repair, maintenance, renewal or use of the Contestable Work or Non-Contestable Work. |
| **Licensed Distribution Network Operator (LDNO)** | the holder of a Licence to distribute electricity. |
| **LV** | not more than 1kV |
| **Maximum Capacity** | means in relation to any connection the maximum amount of electricity, as agreed with us and expressed in kW or kVA, that can be imported from or exported onto our Distribution System. |
| **Meter Point Administration Number (MPAN)** | is a 21 digit reference to uniquely identify Exit/ Entry Point, such as individual domestic residences. |
| **Minimum Scheme** | is defined in paragraphs 5.1 to.5.7 |
| **National Electricity Registration Scheme** | is defined in paragraph 3.3 |
| **New Fault Level Capacity** | is defined in paragraph 5.24 |
| **New Network Capacity** | is defined in paragraph 5.24 |
| **NGET** | National Grid Electricity Transmission plc |
| **Non-Contestable Work** | is defined in paragraph 1.9 |
| **Notice of Interactivity** | is defined in paragraph **Error! Reference source not found.** |
| **POC Offer** | is defined in paragraph 1.14 |
| **Point of Connection (POC)** | is the point (or points) of physical connection to our existing Distribution System. |
| **Premises** | means any land, building or structure |
| **Reinforcement** | is defined in paragraphs 5.16 to.5.21 |
| **Relevant Section of Network** | is defined in paragraph 5.24 |
| **Rent-a-Jointer Services** | the service relating to hiring of resource from us to facilitate the provision of unmetered connections. |
| **Required Capacity** | is defined in paragraph 5.24 |
| **Scheme** | our network design to provide the connection. |
| **Service Line** | is defined in paragraph 7.6 |
| **Single LV Service Demand Connection** | is defined in paragraph 7.6 |

| | |
|---|---|
| **Small Project Demand Connection** | is defined in paragraph 7.6 |
| **Speculative Developments** | is defined in paragraph 5.39 |
| **SSEG** | is defined in paragraph |
| **Supplier** | a person who holds a Supply Licence. |
| **Supply Licence** | a licence granted under section 6(1)(d) of the Act. |
| **Supply Number** | a unique identifier of those Entry/ Exit Points on the Distribution System which are used for the purposes of either taking a supply of electricity or for the connection of a distributed generator, and which forms the basis of the metering point record on the Company's registration system. |
| **Temporary Connections** | is defined in paragraph 5.19 |
| **Validity Period** | The period for which a connection Offer or POC Offer is open for acceptance. |
| **Voltage of Connection** | is the voltage at the POC between the existing distribution network and the assets used to provide the connection. For clarity, this is not necessarily the voltage of supply to the Customer |
| **Wide Area Scheme** | Is defined in paragraph 5.32A |
| **Working Day** | Any day other than a Saturday, a Sunday, Christmas Day, Good Friday or a day which is a bank holiday within the meaning of the Banking and Financial Dealings Act 1971. |