WESTERN POWER DISTRIBUTION

Serving the Midlands, South West and Wales

ST: TP14D/5

PRE-ENERGISATION GUIDANCE NOTE

(For LV Combined Cut-Out, CT & Meter Cabinet Installations)

Summary

This Guidance Note has been prepared to support the pre-energisation testing of LV Combined Cut-Out, CT & Meter Cabinet Installations in accordance with Standard Technique ST: TP14D/5.

This document has been written around the product manufactured by Lucy Electric Ltd.

Author: Graham Brewster

Date: October 2018

1.0 INTRODUCTION

This Guidance Note has been prepared to support the pre-energisation testing of LV Combined Cut-Out, CT & Meter Cabinet Installations in accordance with Standard Technique ST: TP14D/5.

This document has been written around the product manufactured by Lucy Electric Ltd.

2.0 LV COMBINED CUT-OUT, CT & METER CABINETS

2.1 Exterior View

The exterior view of a Lucy LV combined cut-out, CT & meter cabinet is as follows:

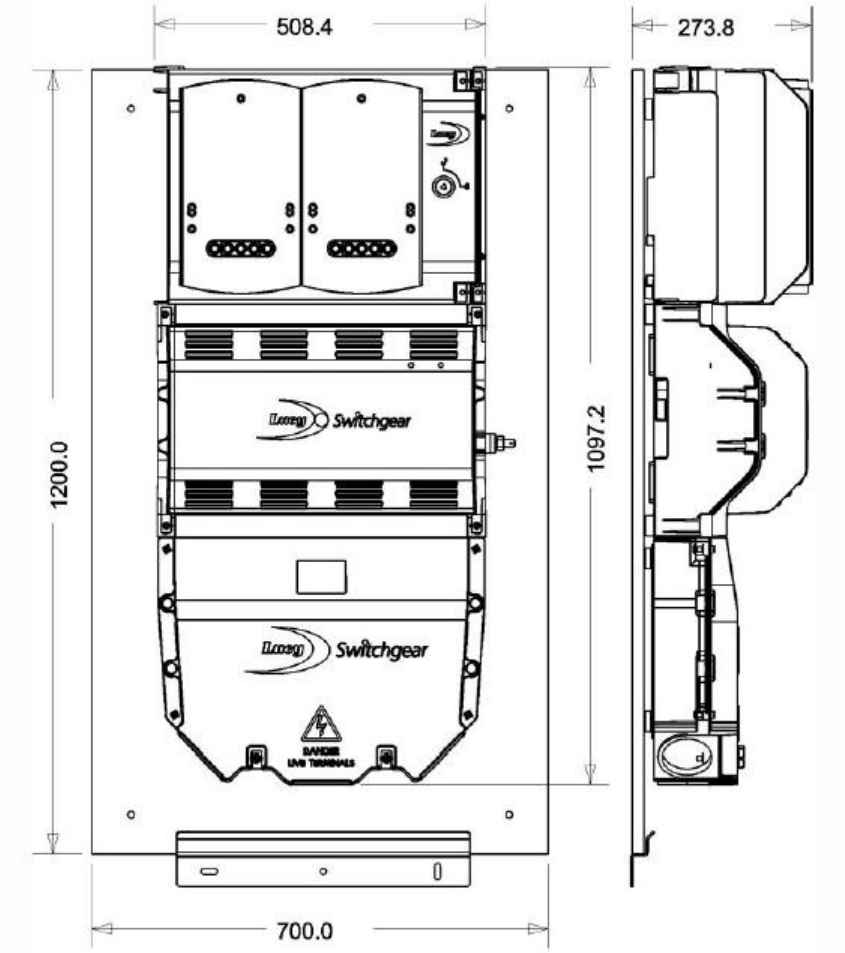

2.2 Interior View

The top section of a Lucy LV combined cut-out, CT & meter cabinet comprises of two sealable and lockable sequentially opening doors which segregate the CT / busbar side from the meter connection side.

The interior view of the meter connection side of a Lucy LV combined cut-out, CT & meter cabinet is as follows:

The interior view of the CT / busbar side of a Lucy LV combined cut-out, CT & meter cabinet is as follows:

2.3 Wiring Diagram

A schematic diagram of the secondary circuits within a Lucy LV combined cut-out, CT & meter cabinet is as follows:

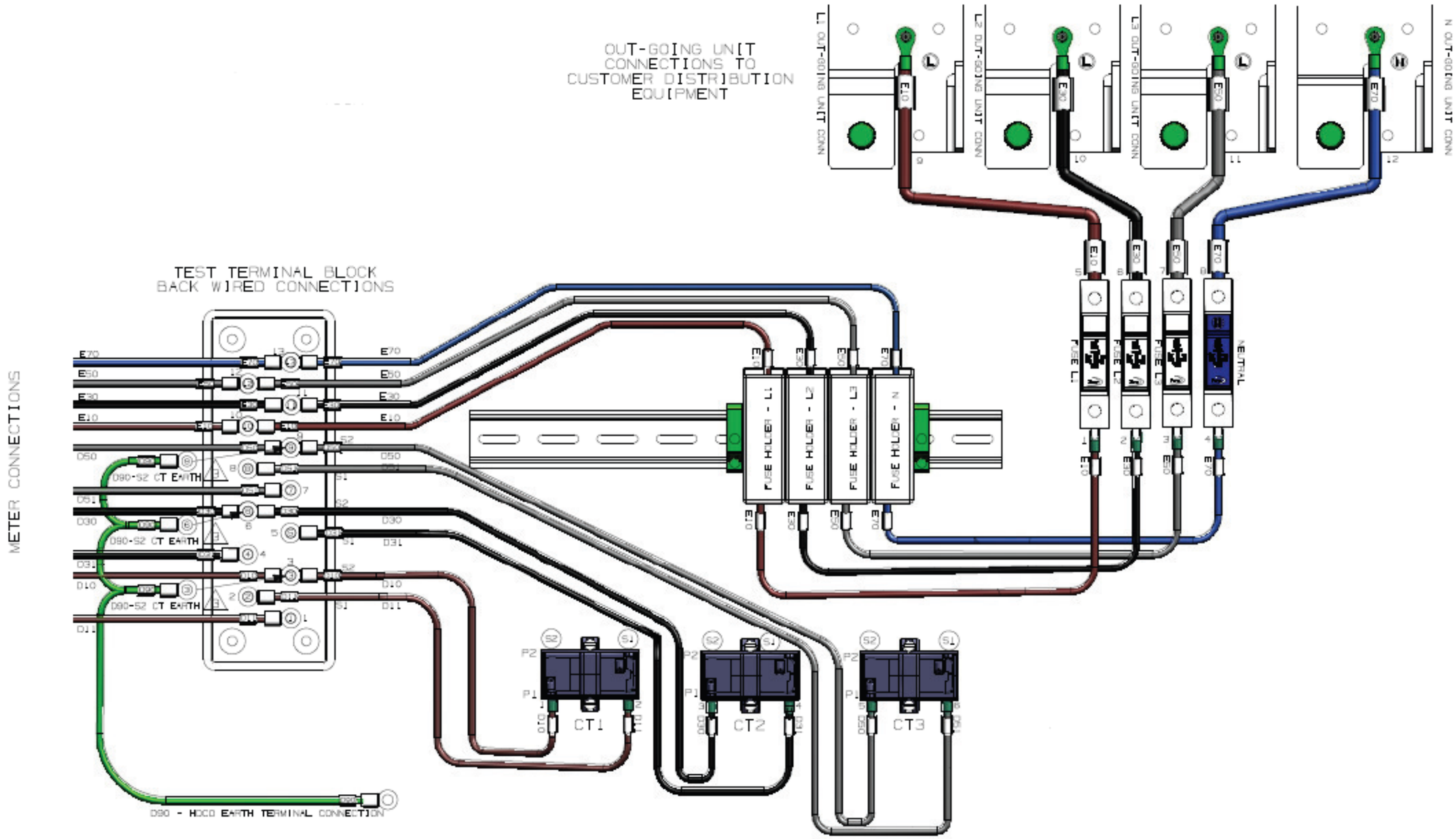

2.4 Test Terminal Block

2.4.1 “CT” Links

“CT” links are used for shorting the CT secondary winding. Photographs of the test terminal block displaying the “CT” links are shown below. The “CT” link is the top one / one on the right on each of the three pairs.

The photograph on the left shows the “CT” link in the in the “open” position (i.e. CTs not shorted). The photograph on the right shows the “CT” link in the in the “closed” position (i.e. CTs shorted).

“CT” LINKS **OPEN**

“CT” LINKS **CLOSED**
(CTs Shorted)

2.4.2 “Meter” Links

“Meter” links are used for disconnecting the meter from the CT. Photographs of the test terminal block displaying the “meter” links are shown below. The “meter” link is the bottom one / one on the left on each of the three pairs.

The photograph on the left shows the “meter” links in the in the “open” position (i.e. meter disconnected from the CT). The photograph on the right shows the “meter” links in the in the “closed” position (i.e. meter connected to the CTs).

“METER” LINKS **OPEN**
(Meter Disconnected From CTs)

“METER” LINKS **CLOSED**

2.5 Test Terminal Block Reference Diagram

The following reference diagram of the test terminal block will be employed in the following sections:

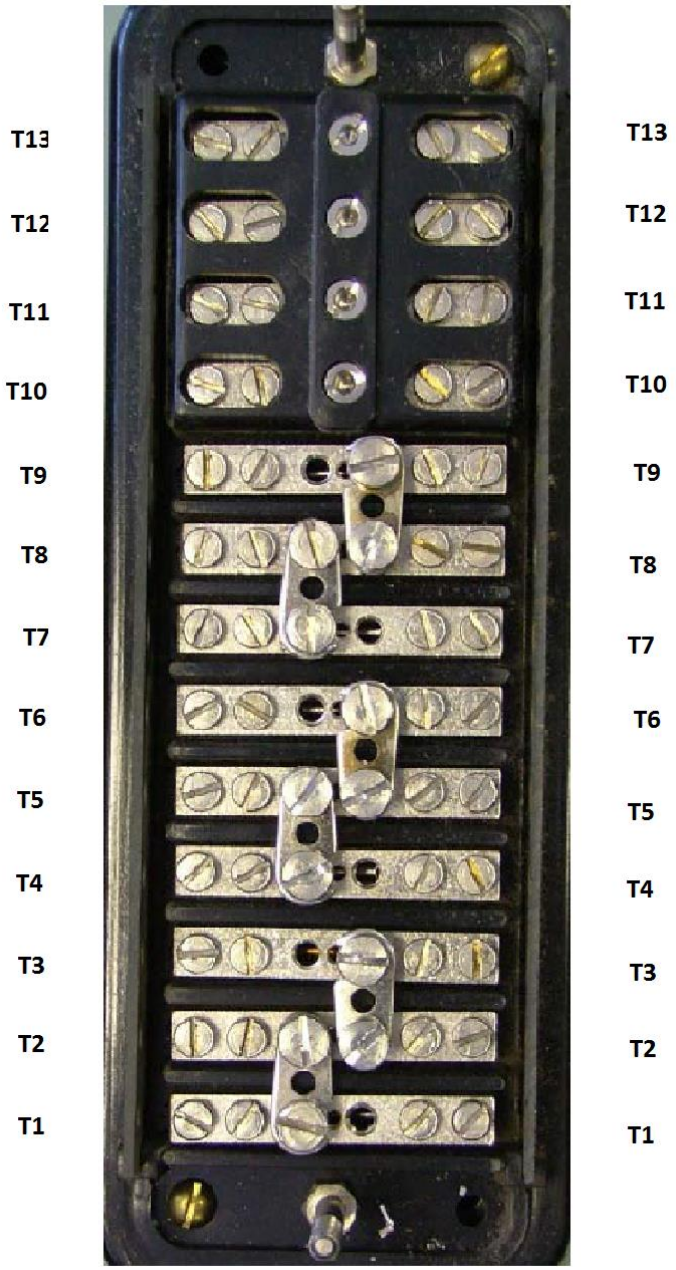

2.6 “Birth Certificate” Documentation

Two paper copies of the manufacturer’s “Birth Certificate” (aka Test Certificate) should have been supplied with the LV Combined Cut-Out, CT & Meter Cabinet.

3.0 FOREWORD

One of the tests to be carried out is a primary injection test, which requires a three-phase power supply for the injection test set. The injection test can either be carried out:

a) In the depot prior to installation of the cabinet, or

b) On site following installation of the cabinet and energisation of the service cable, or

c) On site following energisation of the customer’s installation, although the customer will have to be off supply for the duration of the testing

In the case of a) the supply for the test set is derived from a three-phase supply in the depot whereas for b) & c) the three-phase supply for the test set is derived from the cabinet itself i.e. it requires the cabinet to be live whilst the test is carried out. For this reason the order of preference for primary injection testing is a) first, b) second and c) third.

This Guidance Note has been written around approach a). Appendix A describes the alternative testing procedure required for approach b) & c) i.e. where all testing is carried out on site following installation of the cabinet. It takes into account the additional hazard presented by the live cabinet.

Appendix B describes the recommended arrangement for the depot test supply.

4.0 PRE-ENERGISATION (“DEPOT”) TESTING PROCEDURE

4.1 “Birth Certificate” Documentation

Check that two paper copies of the manufacturer’s “Birth Certificate” (aka Test Certificate) have been supplied with the LV Combined Cut-Out, CT & Meter Cabinet. These certificates must be retained with the cabinet and kept in good condition.

4.2 General

The following procedure presumes that the LV combined cut-out, CT & meter cabinet is to be tested in a depot where a three-phase supply is available.

The following sections make reference to the diagrams in Section 2.3 & 2.5 above.

a) Remove Test Terminal Block cover.

b) Confirm the “CT” links are closed (see Section 2.4.1 above).

c) Open the “Meter” links (see Section 2.4.2 above).

d) Confirm all test instruments have an in-date calibration.

4.3 General Details

Complete the “General Details” part of the Test Sheet.

4.4 LV Combined Cut-Out, CT & Meter Cabinet Details

Complete the “LV Combined Cut-out, CT & Meter Cabinet Details” part of the Test Sheet.

a) Confirm the panel has the correct current rating (e.g. matches that stated on the works order).

b) The serial number is located on the inside of the meter access cover.

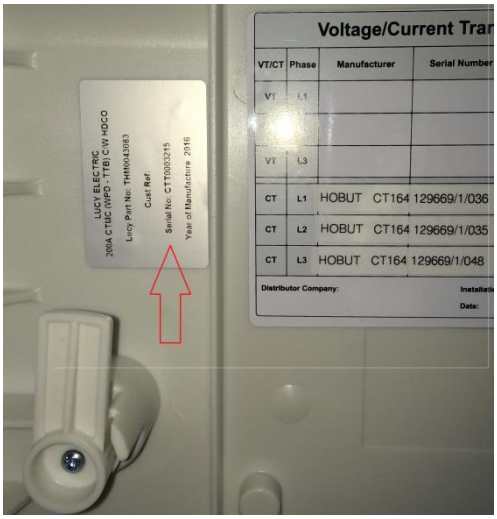

c) Remove and check the J fuses for correct rating and continuity. Replace the fuses.

d) Remove and check the “meter” fuses mounted on the rail section in the meter connection side of the cabinet for correct rating (4 Amp) and continuity. Replace the fuses.

e) Confirm the terminal screws on the “meter” fuses are tight.

f) Remove and check the “voltage” fuses mounted in the CT / busbar side of the cabinet for correct rating (25 Amp) and continuity. Replace fuses.

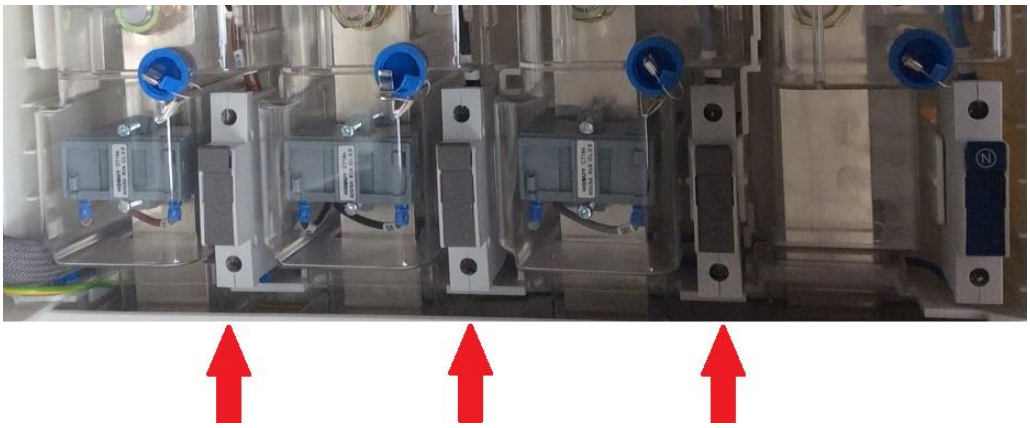

g) Confirm the terminal screws on the “voltage” fuses are tight.

4.5 CT Details

Complete the “CT Details” part of the Test Sheet.

a) Remove the frosted Perspex covers shrouding the busbars & CTs by removing the blue bungs and undoing the fixing screws. Note that you may find that you are able to do this without having to snip the security seals.

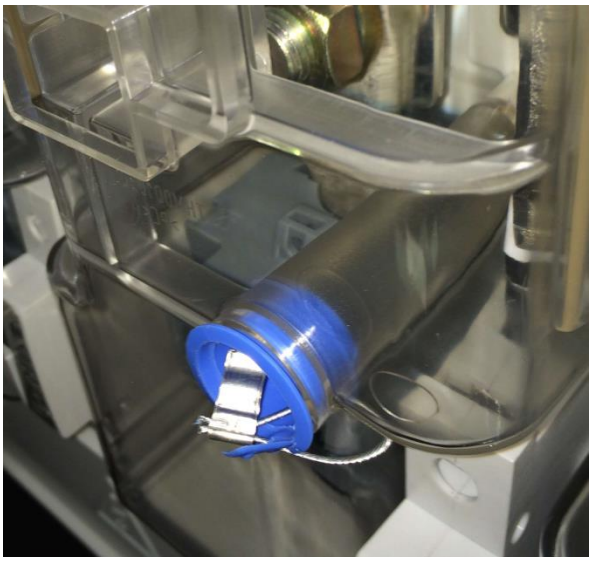

b) Confirm all CTs have the same ratio (use the label on the CT).

c) Confirm that all CT “P2” faces point upwards towards the customer connection, and hence that all CT “P1” faces point downwards towards the incoming service cable.

View looking down on the CT showing the location of the “P2” marking

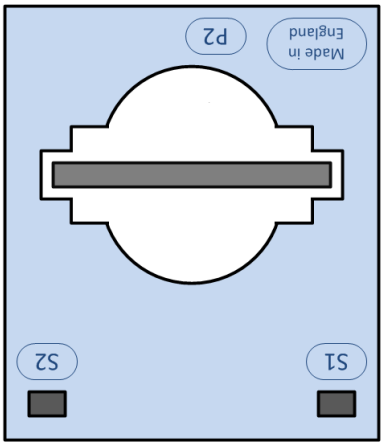

The “P2” marking is not straightforward to see because it is hidden by the busbar. In the event that the “P2” marking cannot be seen directly then confirm that the “S2” marking is on the left when viewed from above.

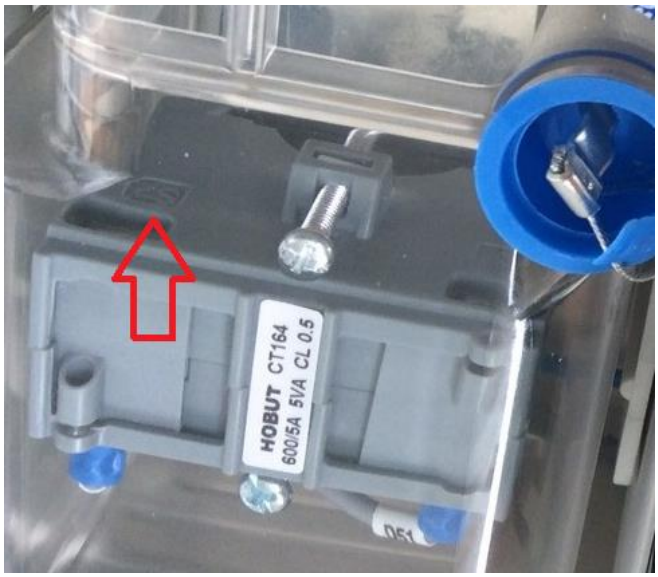

d) Confirm the terminal screws on the CTs are tight.

4.6 Wiring Checks

a) Visually trace the voltage and CT secondary wiring to the test terminal block.

- Confirm wiring with brown insulation is connected to the L1 CT
- Confirm wiring with black insulation is connected to the L2 CT
- Confirm wiring with grey insulation is connected to the L3 CT
- Confirm wiring with brown insulation is connected to the L1 Busbar (i.e. L1 voltage wiring)
- Confirm wiring with black insulation is connected to the L2 Busbar (i.e. L2 voltage wiring)
- Confirm wiring with grey insulation is connected to the L3 Busbar (i.e. L3 voltage wiring)
- Confirm wiring with blue insulation is connected to the N Busbar (i.e. N voltage wiring)

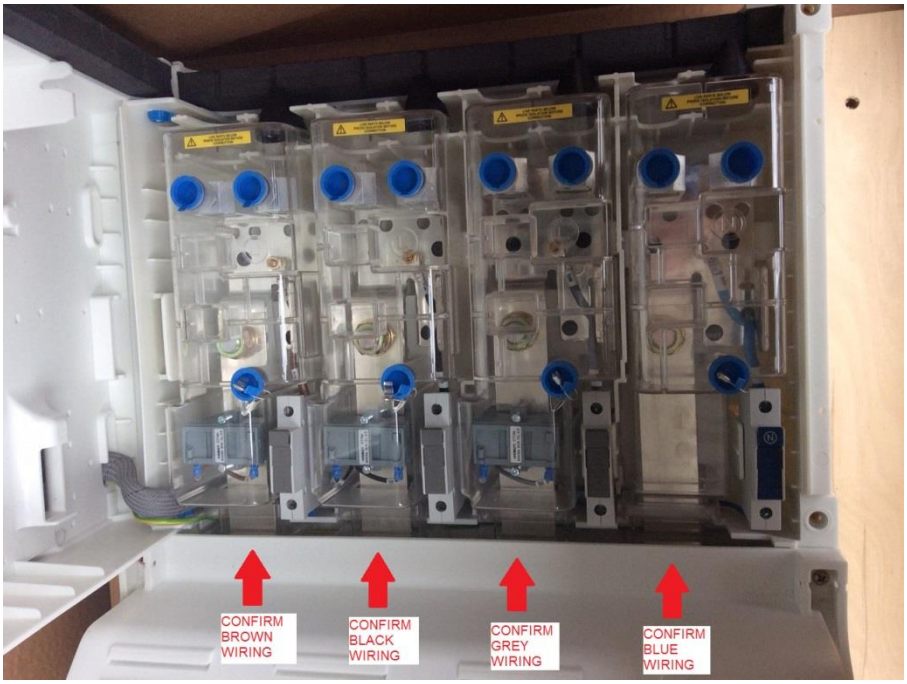
CONFIRM
BROWN
WIRING
CONFIRM
BLACK
WIRING
CONFIRM
GREY
WIRING
CONFIRM
BLUE
WIRING

Confirm wiring with brown insulation is connected to terminals T1, T2, T3 & T10

- Confirm wiring with black insulation is connected to terminals T4, T5, T6 & T11
- Confirm wiring with grey insulation is connected to terminals T7, T8, T9 & T12
- Confirm wiring with blue insulation is connected to terminal T13

4.7 CT Polarity Checks

These checks are carried out by flick testing.

a) Open the “CT” links (see Section 2.4.1 above).

b) Connect the test lead to the ‘positive’ (red) terminal on the flick tester. Feed the free end of the test lead through the L1 CT in the P1 to P2 direction (i.e. in on the bottom / cut-out side and out on the top / customer tails side) and repeat (i.e. form a double loop). Connect the free end of the lead to the ‘negative’ terminal on the flick tester.

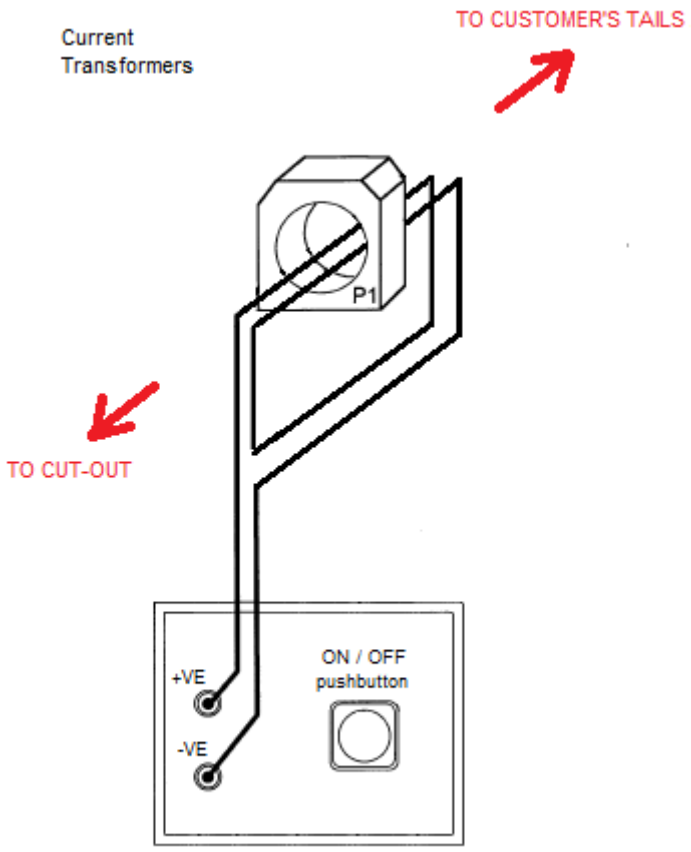

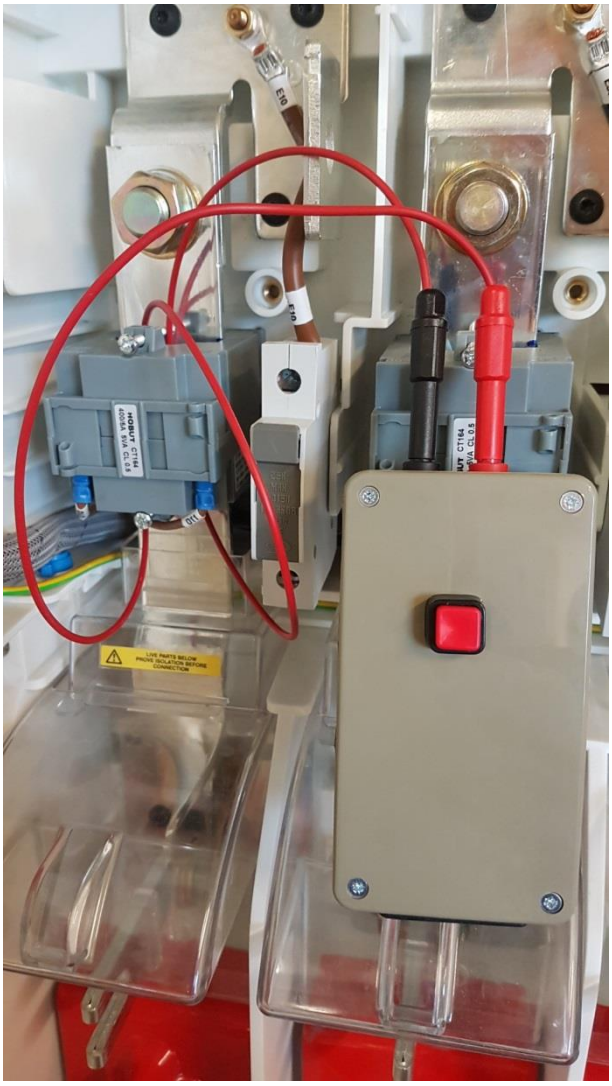

c) Connect the ‘positive’ lead on the galvanometer to test block terminal ‘T2’ and the ‘negative’ lead to terminal ‘T3’. Select the galvanometer to the 50µA range.

d) Press and hold the on / off button on the flick tester and the galvanometer should momentarily show a positive reading. Release the on / off button and the galvanometer should momentarily show a negative reading. If this is the case mark that the CT polarity is correct on the test sheet.

If the galvanometer does not move at all then check whether:

- The battery in the flick tester is flat (replace where necessary)
- The “CT” links are closed (open where necessary)
- The galvanometer is selected to the 50µA range (alter where necessary).

If the galvanometer readings are contra to the above then double-check that both the flick tester and the galvanometer have been connected correctly. If all the connections are correct then either the CT is the wrong way around (i.e. P1 direction is incorrect) or the CT secondary connections are wrong (i.e. S1 terminal connected to ‘T3’ instead of ‘T2’).

e) Remove the test lead from the L1 CT.

f) Repeat c), d), e) & f) but this time feed the test lead through the L2 CT and connect the ‘positive’ lead on the galvanometer to test block terminal ‘T5’ and the negative / black lead to terminal ‘T6’.

g) Repeat c), d), e) & f) but this time feed the test lead through the L3 CT and connect the ‘positive’ lead on the galvanometer to test block terminal ‘T8’ and the negative / black lead to terminal ‘T9’.

h) Close the “CT” links (see Section 2.4.1 above).

i) If any of the CTs are found to be connected the wrong way around then do not proceed with the testing until this has been resolved.

4.8 CT Ratio Checks

These checks are carried out by primary injection testing.

This procedure has been written around the primary injection test set manufactured by Systek Control Systems (formerly known as Quinton Crane Electronics).

This section makes reference to the following connection diagram:

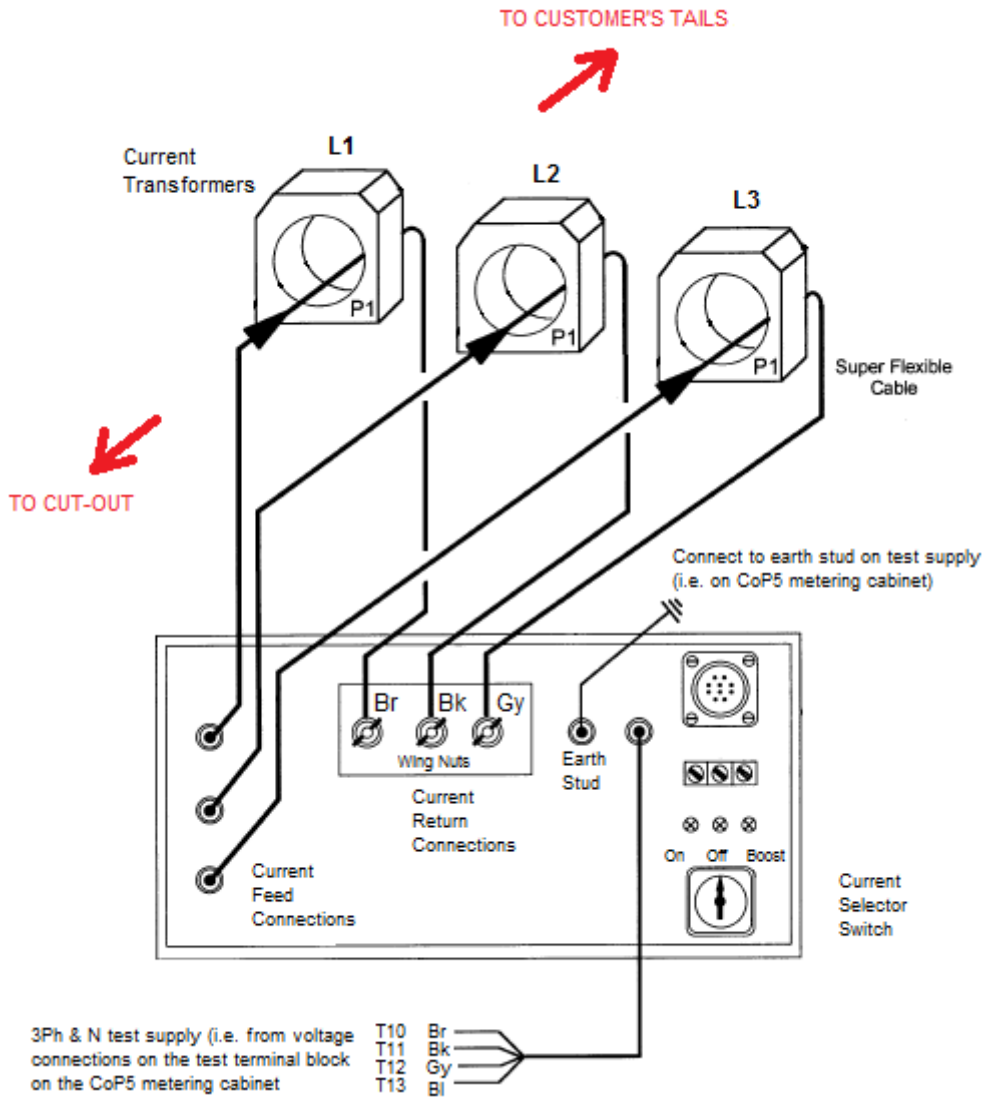

a) Check the test supply is switched off.

b) Check the Current Selector Switch on the Injection Test set is set to 'Off '.

c) Connect the injection test set 'earth stud' to the earth stud on the test supply (<u>not</u> the earth terminal on the cabinet under test).

d) Feed the 'super flexible' cables through the Current Transformers in the P1 to P2 direction (i.e. in on the bottom / cut-out side and out on the top / customer tails side) - you may find it easier feeding the cable ‘diagonally’ through the CT, say from bottom right to top left. Connect the free end of the cables to the “Current Return” terminals on the test set using the wing nuts. Make sure that the flexible cable with:

- The ‘brown’ coloured termination is fed through the L1 (brown) phase CT and is connected to the ‘L1’ current return terminal
- The ‘black’ coloured termination is fed through the L2 (black) phase CT and is connected to the ‘L2’ current return terminal
- The ‘grey’ coloured termination is fed through the L3 (grey) phase CT and is connected to the ‘L3’ current return terminal

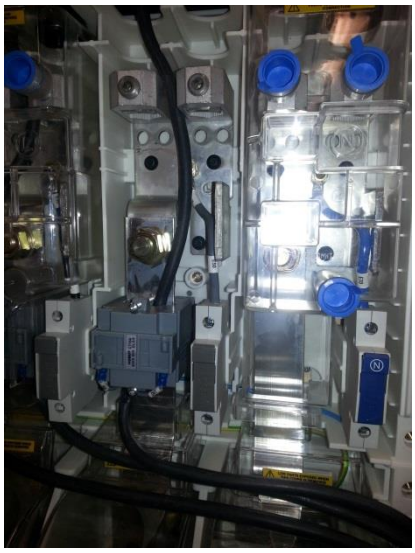

e) Connect the injection test set 'power supply' lead to the test supply (i.e. to the voltage terminals on the test terminal block on the CoP5 metering panel and not the test terminal block on the cabinet under test). The connections should be as follows:

  – “brown” lead to T10
  – “black” lead to T11
  – “grey” lead to T12
  – “blue” lead to T13

f) Switch the test supply on.

g) Select the 'Current Selector Switch' on the injection test set to the 'On' position and check that the primary injection current is at least 60A using a clip-on ammeter attached to the ‘super flexible' cables in turn. If the primary injection current is less than 60A then select the 'Current Selector Switch' on the injection test set to the 'Boost' position instead.

h) Accurately measure and record the primary injection current using a clip-on ammeter attached to the ‘super flexible' cables in turn.

i) Measure and record the CT secondary current at the rear of the test terminal block using a clip-on ammeter attached to the CT secondary wiring:

- Measure the L1 current by connecting the clip-on meter around wire D11 (connected to terminal T1).
- Measure the L2 current by connecting the clip-on meter around wire D31 (connected to terminal T4).
- Measure the L3 current by connecting the clip-on meter around wire D51 (connected to terminal T7).

Guidance

The Kyoritsu Clamp Adapter 8112 converts ac current to voltage and therefore is connected to multi-meter VOLTAGE terminals not current terminals. The output voltage depends on the switch selection as follows:

On 200mA range	1 volt = 1 amp	
On 2A range	0.1 volts = 1 amp	(i.e. 1 volt = 10 amps)
On 20A range	0.01 volts = 1 amp	(i.e. 1 volt = 100 amps)

j) Select the 'Current Selector Switch' on the injection test set to 'Off '.

k) Switch off the test supply.

l) Calculate and record the CT ratio.

m) Compare this calculated ratio with the ratio on the CT label. They should be the same. If a discrepancy is found then do not proceed with the testing until this has been resolved.

n) Disconnect the injection test set 'power supply' lead from the test supply.

o) Disconnect the 'super flexible' cables from the “Current Return” terminals on the test set using the wing nuts and remove the cables from the CTs.

p) Disconnect the injection test set 'earth connection' from the electrical earth on the test supply.

q) Re-fix the frosted Perspex covers back in position over the busbars & CTs and replace any security seals that were removed.

r) Close the meter links ((see Section 2.4.2 above).

4.9 DC Resistance Checks

4.9.1 DC resistance of CT secondary circuits

This test measures the DC resistance of the CT secondary wiring.

a) Open the “CT” links (see Section 2.4.1 above).

b) Prior to carrying out the measurements connect the test instrument leads together and “zero out” the display i.e. compensate for lead resistance errors.

c) Measure and record the DC resistance of each CT secondary circuit at the test terminal block i.e. the combined resistance of the CT secondary winding and the associated panel wiring (see diagram below).

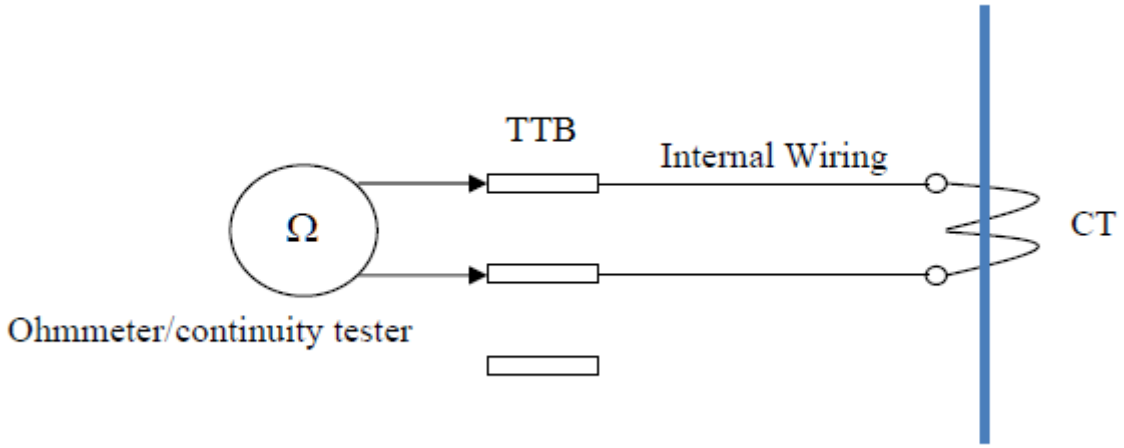

- Measure the resistance of the L1 CT circuit by connecting the ohmmeter between terminals T2 and T3.
- Measure the resistance of the L2 CT circuit by connecting the ohmmeter between terminals T5 and T6.
- Measure the resistance of the L3 CT circuit by connecting the ohmmeter between terminals T8 and T9.

Short circuits (0 ohms) and open circuits (∞ ohms) require investigation.

Guidance

If the resolution of the multi-meter is low it may not be possible to differentiate a low CT secondary winding resistance from a short circuit. If this is the case, check for open circuits only.

d) Close the “CT” links (see Section 2.4.1 above).

4.9.2 Verification That Voltage & Meter Fuses Are Connected To The Correct Phase And In The Phase Conductor Only

The following makes reference to the wiring diagram below.

a) Connect an ohmmeter / continuity tester between the top stalk of the L1 J fuse and terminal T10 and confirm a short circuit condition is present. Check that an open circuit condition exists when the L1 Voltage fuse holder (25A fuse) and the L1 Meter fuse holder (4A fuse) are removed in turn.

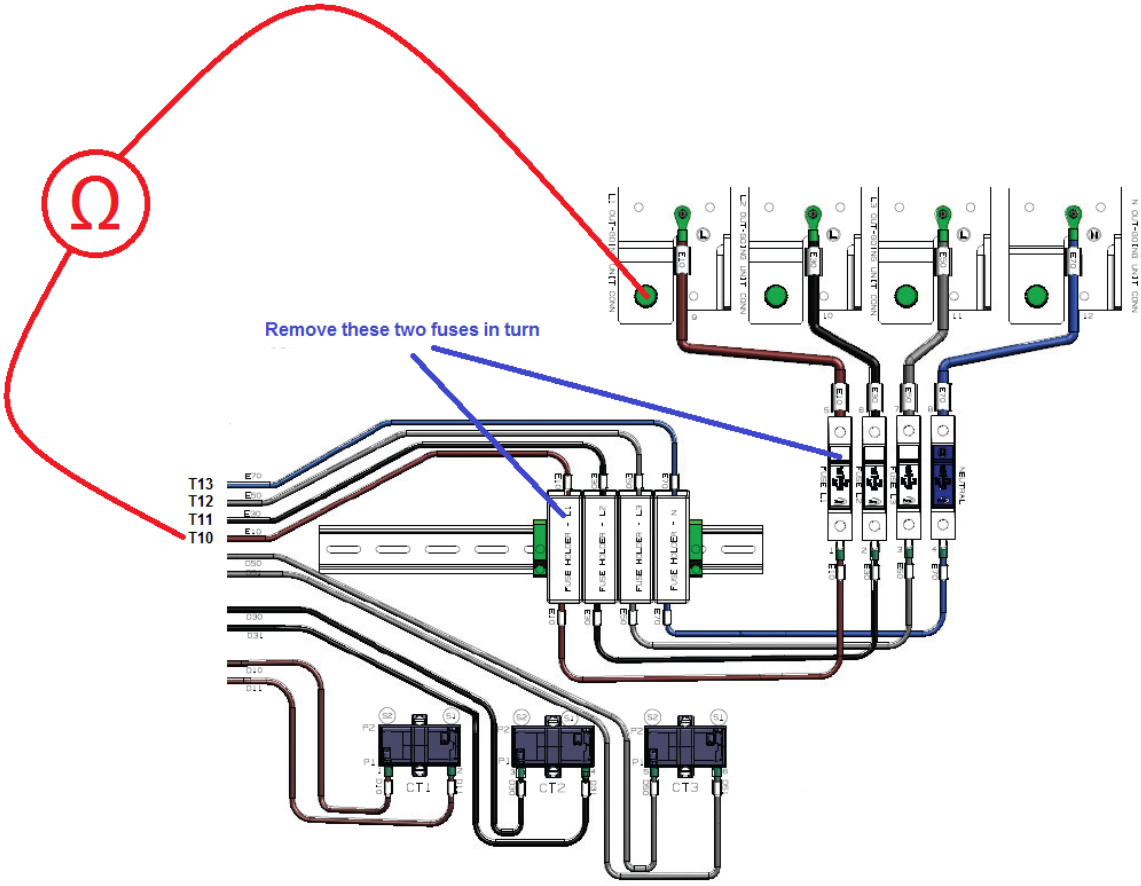

b) Connect an ohmmeter / continuity tester between the top stalk of the L2 J fuse and terminal T11 and confirm a short circuit condition is present. Check that an open circuit condition exists when the L2 Voltage fuse holder (25A fuse) and the L2 Meter fuse holder (4A fuse) are removed in turn.

c) Connect an ohmmeter / continuity tester between the top stalk of the L3 J fuse and terminal T12 and confirm a short circuit condition is present. Check that an open circuit condition exists when the L3 Voltage fuse holder (25A fuse) and the L3 Meter fuse holder (4A fuse) are removed in turn.

d) Connect an ohmmeter / continuity tester between the cut-out neutral and terminal T13 and confirm a short circuit condition is present. Check that an open circuit condition exists when the N Voltage fuse holder (solid link) and the N Meter fuse holder (solid link) are removed in turn.

4.10 Insulation Resistance Checks

4.10.1 Insulation Resistance of Busbars & Voltage Connections

Measure and record the insulation resistance of the busbars and voltage wiring. Any value less than 999 MΩ needs investigating.

a) Measure the insulation resistance to earth of the L1 busbar and voltage wiring by connecting the IR tester between the cabinet earth terminal and the top stalk of the L1 J fuse.

b) Measure the insulation resistance to earth of the L2 busbar and voltage wiring by connecting the IR Tester between the cabinet earth terminal and the top stalk of the L2 J fuse.

c) Measure the insulation resistance to earth of the L3 busbar and voltage wiring by connecting the IR Tester between the cabinet earth terminal and top stalk of the L3 J fuse.

d) The following additional insulation resistance checks shall be carried out where the meter has not been connected:

- Measure the insulation resistance between the L1 & L2 busbars and voltage wiring by connecting the IR tester between the top stalk of the L1 J fuse and the top stalk of the L2 J fuse.
- Measure the insulation resistance between the L1 & L3 busbars and voltage wiring by connecting the IR tester between the top stalk of the L1 J fuse and the top stalk of the L3 J fuse.
- Measure the insulation resistance between the L2 & L3 busbars and voltage wiring by connecting the IR tester between the top stalk of the L2 J fuse and the top stalk of the L3 J fuse.

4.10.2 Insulation Resistance of CT Secondary Circuit

Measure and record the insulation resistance of the CT secondary wiring by connecting an IR tester between earth and the CT secondary wiring. Any value less than 999 MΩ needs investigating.

a) Temporarily disconnect the CT earth lead (wire D90) from the earth terminal (“Torx” type screwdriver required).

b) Measure and record the insulation resistance of the CT secondary wiring by connecting the IR tester between the cabinet earth terminal and the disconnected earth lead (wire D90).

c) Re-connect the CT earth lead to the earth terminal.

d) Confirm the L1 CT is earthed by connecting a continuity tester between the cabinet earth terminal and terminal T3 and checking that the reading is zero or very low ohms.

e) Confirm the L2 CT is earthed by connecting a continuity tester between the cabinet earth terminal and terminal T6 and checking that the reading is zero or very low ohms.

f) Confirm the L3 CT is earthed by connecting a continuity tester between the cabinet earth terminal and terminal T9 and checking that the reading is zero or very low ohms.

g) Replace Test Terminal Block cover.

4.11 Burden On CTs

Complete “Burden on CTs” part of the test sheet.

4.12 Test Sheet & “Birth Certificate” Documentation

The completed pre-energisation test sheet and one paper copy of the manufacturer’s “Birth Certificate” (aka Test Certificate) must be kept in good condition and returned to the office for uploading into Crown.

The second paper copy of the manufacturer’s “Birth Certificate” should be securely retained within the LV Combined Cut-Out, CT & Meter Cabinet.
.

APPENDIX A: ALTERNATIVE TESTING PROCEDURE

One of the tests to be carried out is a primary injection test, which requires a three-phase power supply for the injection test set. The injection test can either be carried out:

a) In the depot prior to installation of the cabinet, or

b) On site following installation of the cabinet and energisation of the service cable, or

c) On site following energisation of the customer's installation, although the customer will have to be off supply for the duration of the testing

In the case of a) the supply for the test set is derived from a three-phase supply in the depot whereas for b) & c) the three-phase supply for the test set is derived from the cabinet itself i.e. it requires the cabinet to be live whilst the test is carried out. For this reason the order of preference for primary injection testing is a) first, b) second and c) third.

This Appendix A describes the alternative testing procedure required for approach b) or c), which takes into account the additional hazard presented by the live cabinet.

A.1 "Birth Certificate" Documentation

Check that two paper copies of the manufacturer's "Birth Certificate" (aka Test Certificate) have been supplied with the LV Combined Cut-Out, CT & Meter Cabinet. These certificates must be retained and kept in good condition.

A.2 General

This procedure presumes that:

- The LV combined cut-out, CT & meter cabinet has been fully installed.
- The incoming service cable has been laid, connected to the cabinet, and jointed onto the mains cable.
- The voltage fuses and meter fuses are inserted.
- The "CT" links are closed.
- The "Meter" links are closed.
- The J fuses are inserted (Note that this will only be the case if the customer's installation was energised prior to commencing this procedure).

The following sections make reference to the diagrams in Section 2.3 & 2.5 above.

a) Confirm all test instruments have an in-date calibration.

b) Remove the J fuses.

c) Fit red shrouds on to the live incoming J fuse stalks.

d) Confirm and prove cabinet dead.

e) Confirm the customer tails have not been connected, or If connected, confirm isolated at the customer's main switch.

f) Remove Test Terminal Block cover.

g) Confirm the "CT" links are closed (see Section 2.4.1 above).

h) Open the "Meter" links (see Section 2.4.2 above).

A.2 General Details

Complete "General Details" part of Test Sheet in accordance with section 4.3 above.

A.3 LV Combined Cut-Out, CT & Meter Cabinet Details

Complete "LV Combined Cut-Out, CT & Meter Cabinet Details" part of Test Sheet in accordance with section 4.4 above.

A.4 CT Details

Complete "CT Details" part of Test Sheet in accordance with section 4.5 above.

A.5 Wiring Checks

Carry out wiring checks in accordance with section 4.6 above.

A.6 CT Polarity Checks

Carry out CT polarity checks in accordance with section 4.7 above.

A.7 CT Ratio Checks

These checks are carried out by primary injection testing.

This procedure has been written around the primary injection test set manufactured by Systek Control Systems (formerly known as Quinton Crane Electronics).

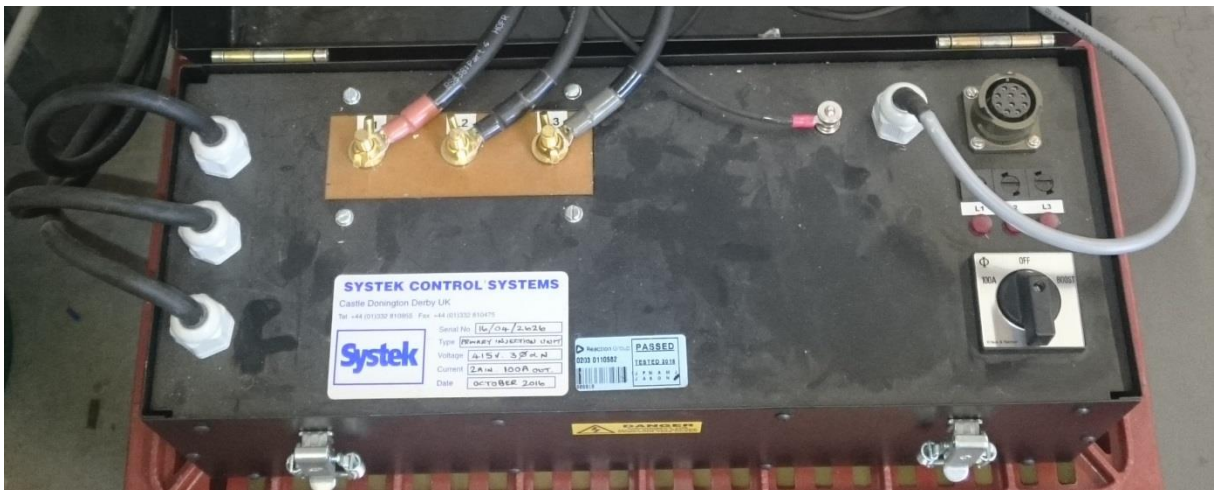

This section makes reference to the following connection diagram:

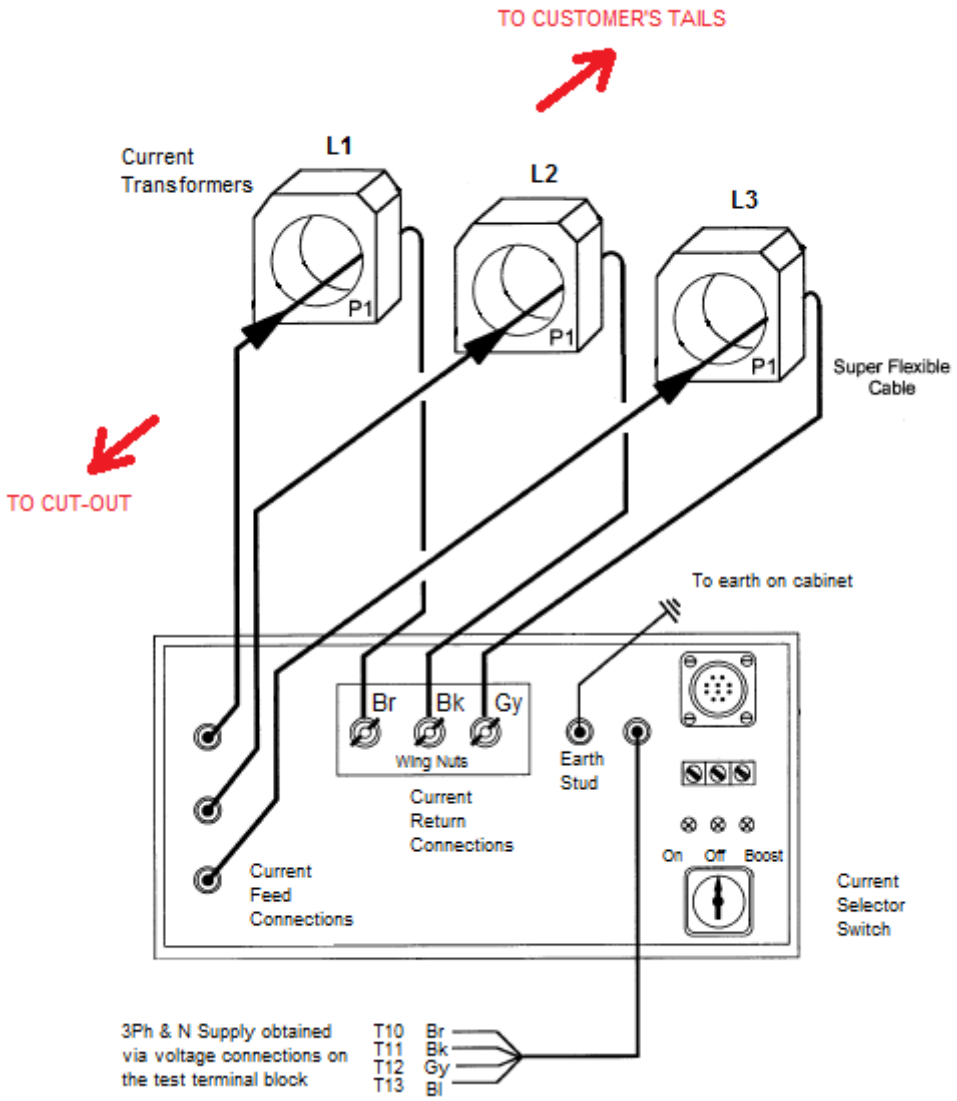

a) Confirm the "CT" links (see Section 2.4.1 above) are closed and the "Meter" links (see Section 2.4.2 above) are open.

> *<u>Note</u>:*
> *If the meter is connected and the "CT" links are left open and the "Meter" links are left closed then the primary injection test could result in the meter registers and the maximum demand indicator being greatly inflated.*

b) Remove the frosted Perspex covers shrouding the busbars & CTs by removing the blue bungs and undoing the fixing screws. Note that you may find that you are able to do this without having to snip the security seals.

c) Check the Current Selector Switch on the Injection Test set is set to 'Off '.

d) Connect the injection test set 'earth connection' to the earth terminal on the cabinet.

e) Feed the 'super flexible' cables through the Current Transformers in the P1 to P2 direction (i.e. in on the bottom / cut-out side and out on the top / customer tails side) - you may find it easier feeding the cable ‘diagonally’ through the CT, say from bottom right to top left. Connect the free end of the cables to the “Current Return” terminals on the test set using the wing nuts. Make sure that the flexible cable with:

- The ‘brown’ coloured termination is fed through the L1 (brown) phase CT and is connected to the ‘L1’ current return terminal
- The ‘black’ coloured termination is fed through the L2 (black) phase CT and is connected to the ‘L2’ current return terminal
- The ‘grey’ coloured termination is fed through the L3 (grey) phase CT and is connected to the ‘L3’ current return terminal

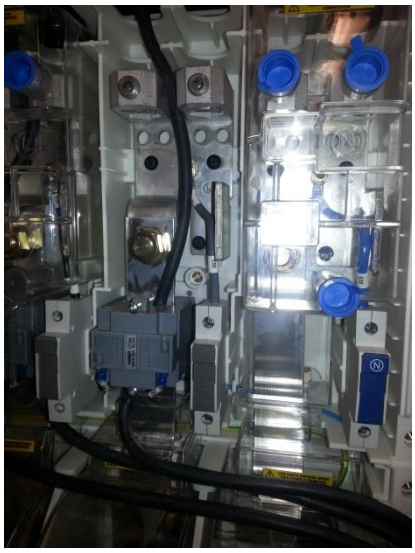

f) If practicable re-fix the frosted Perspex covers back in position over the busbars & CTs. If this is not possible shroud the busbars to safeguard personnel from live voltages.

g) Connect the injection test set 'power supply' lead to the Test Terminal Block as follows:

- Connect the ‘brown’ lead to T10
- Connect the ‘black’ lead to T11
- Connect the ‘grey’ lead to T12
- Connect the ‘blue’ lead to T13

h) Post Danger Notices.

i) **CAUTION!**

THE NEXT STAGES OF THIS PROCEDURE WILL RESULT IN THE BUSBARS IN THE CABINET AND THE VOLTAGE CONNECTIONS ON THE TEST TERMINAL BLOCK (AND ASSOCIATED WIRING) BEING MADE LIVE.

DO NOT APPROACH THE BUSBARS WITHOUT FIRST REMOVING THE J FUSES.

WEAR APPROPRIATE PPE AND EXERCISE DUE CARE AND ATTENTION, ESPECIALLY WHEN WORKING IN THE VICINITY OF THE TEST TERMINAL BLOCK.

j) Remove red shrouds from live incoming J fuse stalks and insert J fuses.

k) Select the 'Current Selector Switch' on the injection test set to the 'On' position and check that the primary injection current is at least 60A using a clip-on ammeter attached to the ‘super flexible' cables in turn. If the primary injection

current is less than 60A then select the 'Current Selector Switch' on the injection test set to the 'Boost' position instead.

l) Accurately measure and record the primary injection current using a clip-on ammeter attached to the ‘super flexible' cables in turn.

m) Measure and record the CT secondary current at the rear of the test terminal block using a clip-on ammeter attached to the CT secondary wiring:

- Measure the L1 current by connecting the clip-on meter around wire D11 (connected to terminal T1).
- Measure the L2 current by connecting the clip-on meter around wire D31 (connected to terminal T4).
- Measure the L3 current by connecting the clip-on meter around wire D51 (connected to terminal T7).

Guidance

The Kyoritsu Clamp Adapter 8112 converts ac current to voltage and therefore is connected to multi-meter VOLTAGE terminals not current terminals. The output voltage depends on the switch selection as follows:

On 200mA range	1 volt = 1 amp	
On 2A range	0.1 volts = 1 amp	(i.e. 1 volt = 10 amps)
On 20A range	0.01 volts = 1 amp	(i.e. 1 volt = 100 amps)

n) Select the 'Current Selector Switch' on the injection test set to 'Off '.

o) Remove the J fuses and fit red shrouds on to the live incoming J fuse stalks.

p) Confirm and prove cabinet dead.

q) Remove Danger Notices.

r) Calculate and record the CT ratio. Compare this calculated ratio with the ratio on the CT label. They should be the same. If a discrepancy is found then do not proceed with the testing until this has been resolved.

s) Remove the frosted Perspex covers or shrouding covering the busbars & CTs.

t) Disconnect the injection test set 'power supply' lead from the Test Terminal Block.

u) Disconnect the 'heavy super flexible' cables from the “Current Return” terminals on the test set using the wing nuts and remove the cables from the CTs.

v) Disconnect the injection test set 'earth connection' from the electrical earth.

w) Re-fix the frosted Perspex covers back in position over the busbars & CTs and replace any security seals that were removed.

x) Open the “CT” links (see Section 2.4.1 above).

A.8 DC Resistance Checks

Carry out DC resistance checks in accordance with section 4.9 above.

A.9 Insulation Resistance Checks

Carry out insulation resistance checks in accordance with section 4.10 above.

A.10 Burden On CTs

Complete “Burden On CTs” part of the test sheet.

A.11 Checks On Cabinet Completion

a) Confirm the Voltage & Meter fuses & links have been inserted.

b) Close the “Meter” links (see Section 2.4.2 above).

c) Where the meter has not been connected confirm the “CT” links are in the “closed” position (see Section 2.4.1 above).

d) Open the “CT” links (see Section 2.4.1 above) where the meter has been connected.

e) Confirm all internal shroud covers have been re-fixed and secured.

f) Secure cabinet doors then seal.

> *Guidance*
>
> *If the customer tails have been connected, then both the “meter connections” and “CT / busbar connections” doors should be sealed.*
>
> *If the customer tails have not yet been connected, then only the “meter connections” door should be sealed. This means that the customer is able to access the CT / busbar chamber in order to connect the tails.*

g) Check Test Terminal Block cover is in place and seal.

h) Remove red shrouds from live incoming J fuse stalks and insert J fuses if the customer’s installation was energised prior to commencing this procedure.

i) Leave red shrouds on live incoming J fuse stalks and attach J fuse carriers to the external earth stud by cable tie where the customer’s installation was de-energised prior to commencing this procedure.

j) Secure service cable cover and seal.

k) Complete Test Sheet.

A.12 Test Sheet & “Birth Certificate” Documentation

The completed pre-energisation test sheet and one paper copy of the manufacturer’s “Birth Certificate” (aka Test Certificate) must be kept in good condition and returned to the office for uploading into Crown.

The second paper copy of the manufacturer’s “Birth Certificate” should be securely retained within the LV Combined Cut-Out, CT & Meter Cabinet.

APPENDIX B: RECOMMENDED ARRANGEMENT FOR DEPOT TEST SUPPLY

One of the tests to be carried out in the depot is a primary injection test, which requires a three-phase power supply for the injection test set. The recommended depot test supply arrangement is described below.

The padlockable rotary isolator switch allows the test supply to be switched off and locked off when electrical connections are being established, or when the test supply is not in use.

The LV CoP5 remote meter cabinet provides a convenient way of connecting the primary injection test set. Connections to the test set are established via the test terminal block and are protected by the low current capacity fuses located inside the cabinet. Note that the cabinet earth terminal / stud must be accessible externally (in order to earth the test set) and an additional earth terminal / stud should be provided on the exterior of the cabinet where this is not the case. Note also that the connections to the meter are not required and these should be disconnected and removed.

When primary injection testing is carried out on site the test set is also powered via a test terminal block. Hence using a CoP5 cabinet for the depot test supply means that the test set power lead and connection arrangement are identical irrespective of whether the testing is carried out in the depot or on site.

LV Three-Phase, Neutral & Earth Supply	
⋮	Interconnecting cable
	Padlockable 16A 4-Pole 415V Rotary Isolator Switch
⋮	Interconnecting cable
 	CoP5 LV Remote Meter Cabinet. *Note 1:* *Where the cabinet earth terminal / stud is not accessible externally an additional earth terminal / stud should be provided on the exterior of the cabinet.* *Note 2:* *The connections to the meter (poking through the cabinet door) are not required and should be disconnected and removed.*